ORDER NO. VRD9001M103

Service Manual

Video Cassette Recorder

Panasonic VHS HQ

PAL

NV-J35EG/B

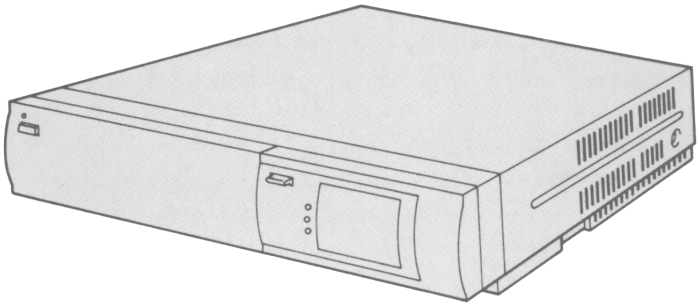

SPECIFICATIONS\ТЕХНИЧЕСКИЕ ХАРАКТЕРИСТИКИ
TECHNICAL INFORMATION\ТЕХНИЧЕСКАЯ ИНФОРМАЦИЯ
ADJUSTMENT PROCEDURES\ПРОЦЕДУРЫ РЕГУЛИРОВКИ
BLOCK DIAGRAMS & SCHEMATIC DIAGRAMS\БЛОК-СХЕМЫ И ПРИНЦИПИАЛЬНЫЕ СХЕМЫ
- Luminance/chrominance block diagram\блок-схема каналов яркости/цветности
- System control & servo block diagram\блок-схема систем управления и серво привода
- Power schematic diagram\принципиальная схема электропитания
- System control/servo and schematic diagram\принципиальная схема системы управления и серво привода
- Luminance/chrominance schematic diagram\принципиальная схема каналов яркости/цветности
- Sub main (sub system control) schematic diagram\принципиальная схема подмодуля системы управления
- Sub main (Luminance/chrominance) schematic diagram\принципиальная схема подмодуля каналов яркости/цветности
- Input/output pack schematic diagram\принципиальная схема платы ввода/вывода
- Head AMP schematic diagram\принципиальная схема усилителя видеоголовок
- Audio schematic diagram\принципиальная схема аудиоусилителя
- Channel select schematic diagram\принципиальная схема переключателя каналов
- TV demodulator pack schematic diagram (NV-j35EG)\принципиальная схема блока ТВ демодулятора (NV-j35EG)
- TV demodulator pack schematic diagram (NV-j35B)\принципиальная схема блока ТВ демодулятора (NV-j35B)
- Timer and operation schematic diagram\принципиальная схема таймера и управления
- VPS pack schematic diagram (NV-j35EG)\принципиальная схема подмодуля ВПС (NV-j35EG)
- RF converter schematic diagram (NV-j35EG)\принципиальная схема ВЧ преобразователя (NV-j35EG)
- RF converter schematic diagram (NV-j35B)\принципиальная схема ВЧ преобразователя (NV-j35B)
- Remote controller (build in digital scanner) schematic diagram)\принципиальная схема дистанционного управления со встроенным сканером
- Interconnection schematic diagram\схема соединения блоков
- ICs and TRs information\цоколевка микросхем и транзисторов

EXPLODED VIEWS & PARTS LIST\СБОРОЧНЫЕ ЧЕРТЕЖИ И СПИСОК ЗАПАСНЫХ ЧАСТЕЙ
- EXPLODED VIEWS\СБОРОЧНЫЕ ЧЕРТЕЖИ
  - Chassis parts sections (1)\шасси (секция 1)
  - Chassis parts sections (2)\шасси (секция 2)
  - Cassette up mechanism section\секция кассетоприемника
  - Casing parts section\секция корпуса
  - Packing parts section\секция упаковочных частей
  - Remote controller (build in digital scanner) unit\ блок дистанционного управления со встроенным сканером
- MECHANICAL REPLACEMENT PARTS LIST\СПИСОК МЕХАНИЧЕСКИХ ЗАПАСНЫХ ЧАСТЕЙ
- ELECTRICAL REPLACEMENT PARTS LIST\СПИСОК ЭЛЕКТРИЧЕСКИХ ЗАПАСНЫХ ЧАСТЕЙ

Matsushita Electric Industrial Co., Ltd.

Central P.O. Box 288, Osaka 530-91, Japan

Panasonic

SPECIFICATIONS

ITEM	SPECIFICATION	
POWER	SOURCE:	220V 50/60Hz (NV-J35EG) 240V 50/60Hz (NV-J35B)
	CONSUMPTION: 22W	
RECORDING SYSTEM	2 rotary heads, helical scanning system	
	PAL	
TV TUNER SYSTEM	NV-J35EG	VHF I : CHE2~CHE4 VHF III: CHS4~CHE12 VHF H: CHS11~CHS20 (PAL/SECAM B) 75Ω unbalanced UHF: CH21~CH69 (PAL/SECAM G) 75Ω unbalanced
	NV-J35B	UHF: CH21~CH69 (PAL I) 75Ω unbalanced
RF OUT SYSTEM	UHF: CH36±4 (PAL/SECAM G) 73^{+2}_{-3}dBμ, 75Ω terminated (NV-J35EG) UHF: CH36±4 (PAL I) 73±3dBμ, 75Ω terminated (NV-J35B)	
VIDEO	HEADS:	4 rotary heads 1 pair for recording, playback (L-R heads) 1 pc. for trick play (L′-R′ heads)
	INPUT:	VIDEO IN Connector (BNC type) 1.0Vp-p, 75Ω terminated EURO AV Connector (21 pin) 1.0Vp-p, 75Ω terminated
	OUTPUT:	EURO AV Connector (21 pin) 1.0Vp-p, 75Ω terminated

ITEM	SPECIFICATION	
AUDIO	HEAD:	1 Stationary head (Normal Audio)
	INPUT:	AUDIO IN Connector (Phono type) More than −10dBV (316mV), more than 50kΩ EURO AV Connector (21 pin) More than −10dBV (316mV), more than 10kΩ MICROPHONE JACK 70dBV
	OUTPUT:	EURO AV Connector (21 pin) −6dBV (500mV), Less than 1kΩ
TAPE FORMAT	VHS Cassette tape (Tape width 12.7mm)	
TAPE SPEED	SP: 23.39mm/s LP: 11.695mm/s (NV-J35B) Record/Playback Time: SP: 4 hours with 240min. type tape LP: 8 hours with 240min. type tape (NV-J35B) FF/REW Time: 5.5min. with 180min. type tape	
DIMENSIONS	380(W)×82(H)×356(D)mm	
WEIGHT	5.0kg (NV-J35EG) 4.9kg (NV-J35B)	
STANDARD ACCESSORIES	1 pc. DIN-RF Cable 1 pc. Infra-red remote controller (Build in Digital Scanner type) 1 pc. Programme sheet 1 pc. AC Mains Lead	

Weight and dimensions shown are approximate.
Specifications are subject to change without notice.

Technical Information

Please pay attention when you replace the memory IC IC7502 (MN12C261D) on Timer C.B.A.
Since the any data for new memory IC has been initialized at factory,the buzzer"on"data should be always set on the memory IC when your repairing.
The following steps must be performed after installing the new memory IC to Timer C.B.A.

Method (Contacting jumper wire on Timer C.B.A.)

1. Contact the lead wires between pin 54 and pin 35 on the Timer IC7501 twice by using jumper wire as shown below.
2. Confirm that "Beep-Beep" sound from the VTR warm you when setting any programmes.

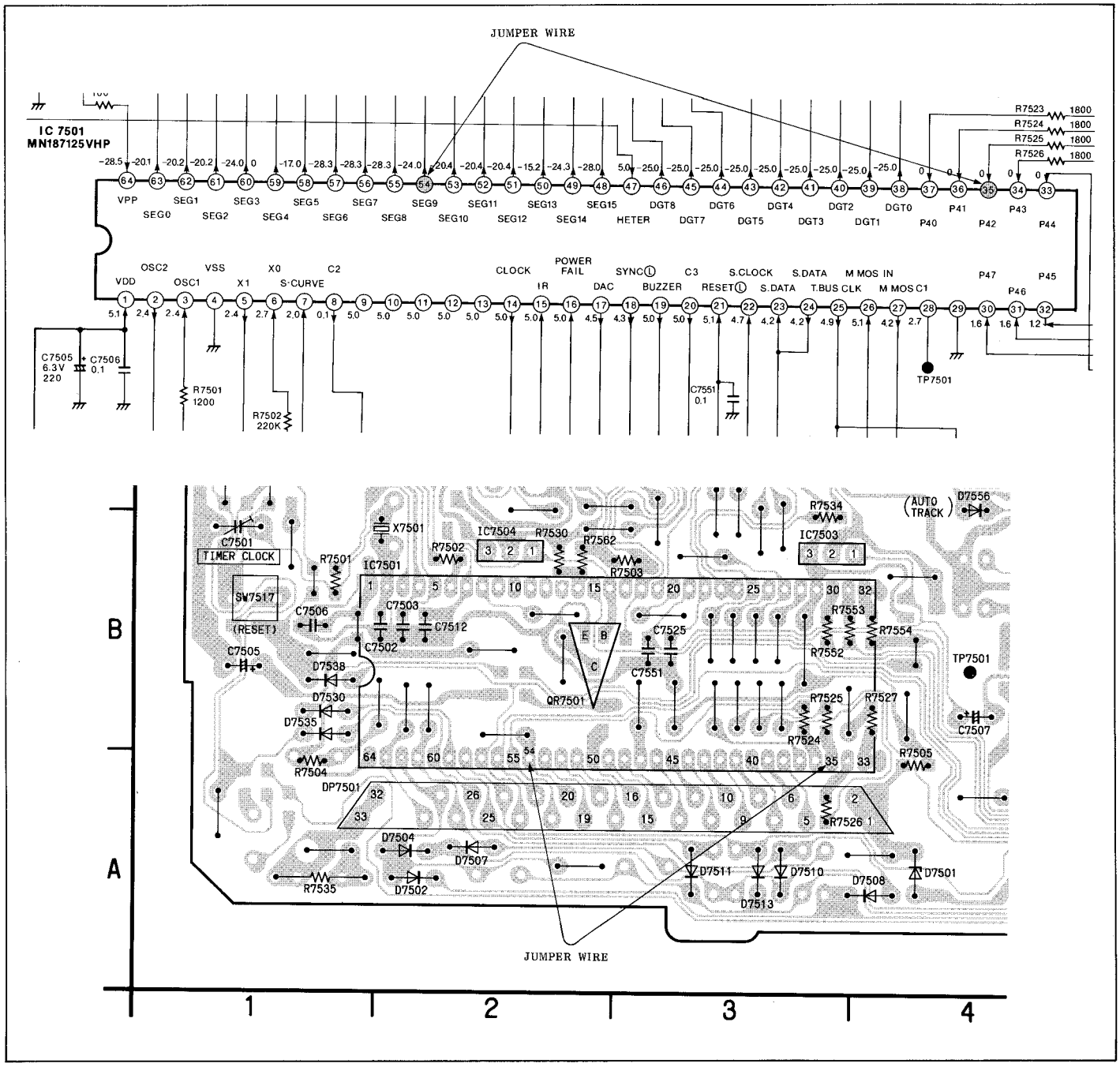

SECTION 2
ADJUSTMENT PROCEDURES

2-1. DISASSEMBLY METHOD

2-1-1. DISASSEMBLY FLOW CHART

This flowchart indicates disassembly steps of the cabinet parts and circuit boards in order to find the necessary items for servicing.
When reassembling, perform the steps in the reverse order.

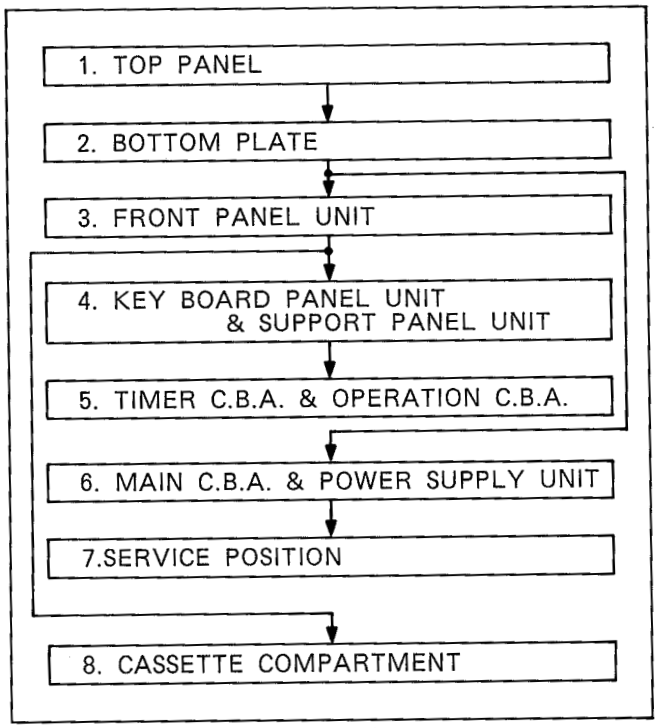

Fig. D1

2-1-2. DETAIL OF DISASSEMBLY METHOD

1. REMOVAL OF THE TOP PANEL UNIT

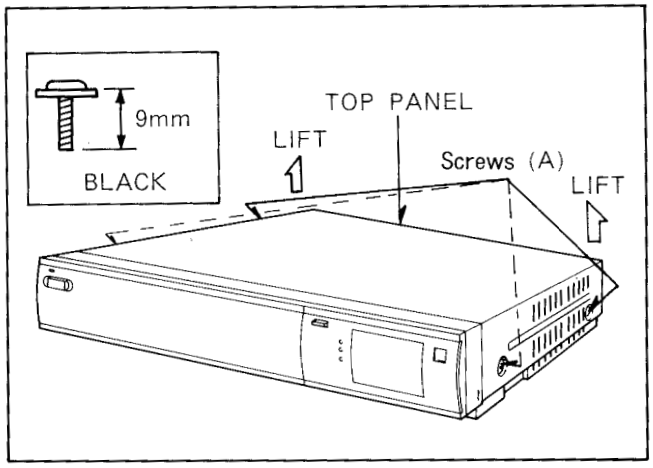

Fig. D2

Remove ... 4 Screws (A) : NV-J35EG
2 Screws (A) : NV-J35B

2. REMOVAL OF THE BOTTOM PLATE

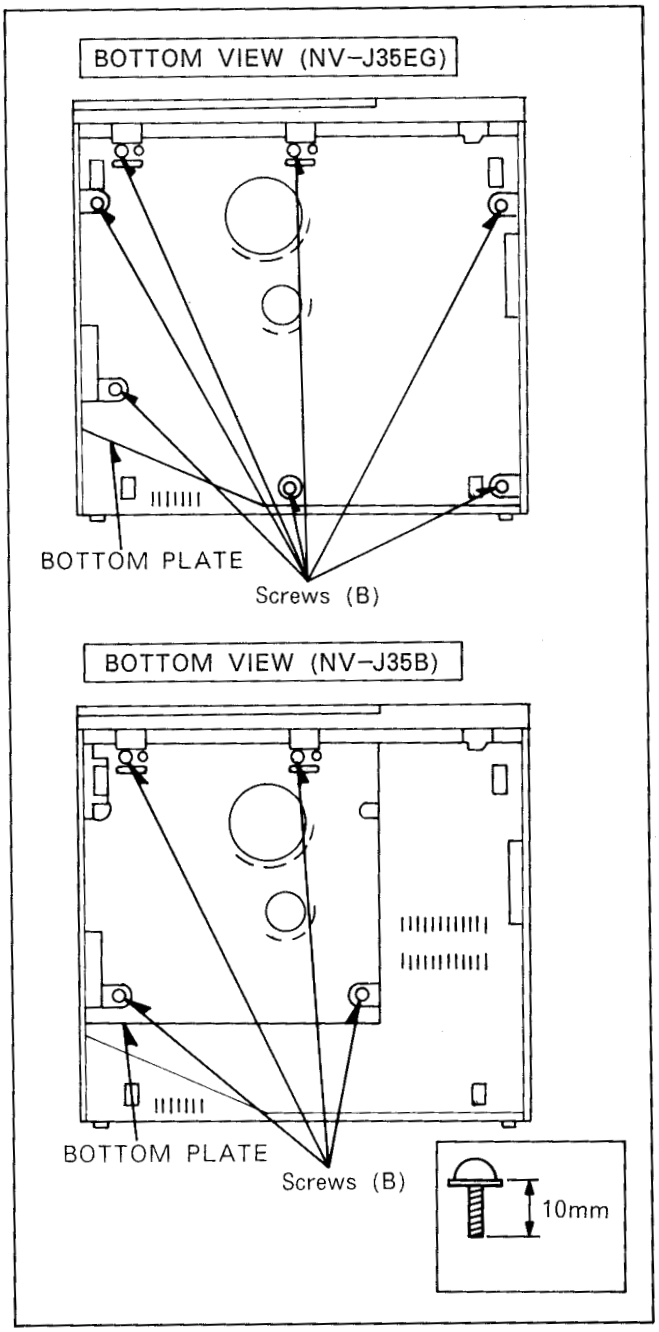

Fig. D3

Remove ... 7 Screws (B) : NV-J35EG
4 Screws (B) : NV-J35B

3. REMOVAL OF THE FRONT PANEL UNIT

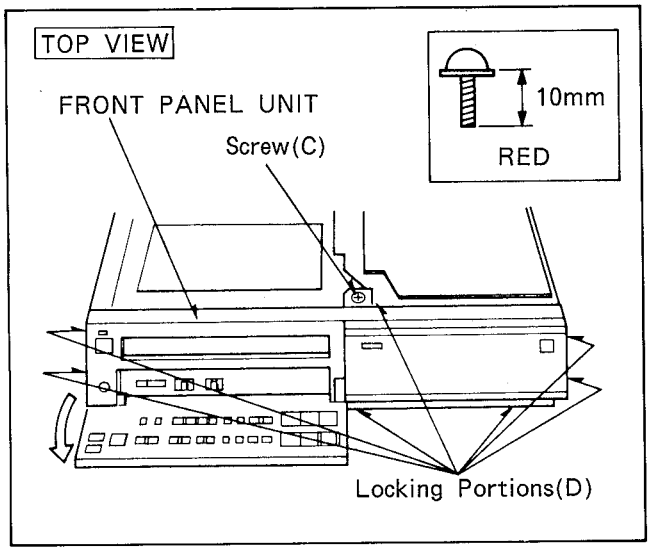

Fig. D4

Remove ... Screw(C)
Unlock ... 7 Locking Portions(D)

4. REMOVAL OF THE KEY BOARD PANEL UNIT AND SUPPORT PANEL UNIT

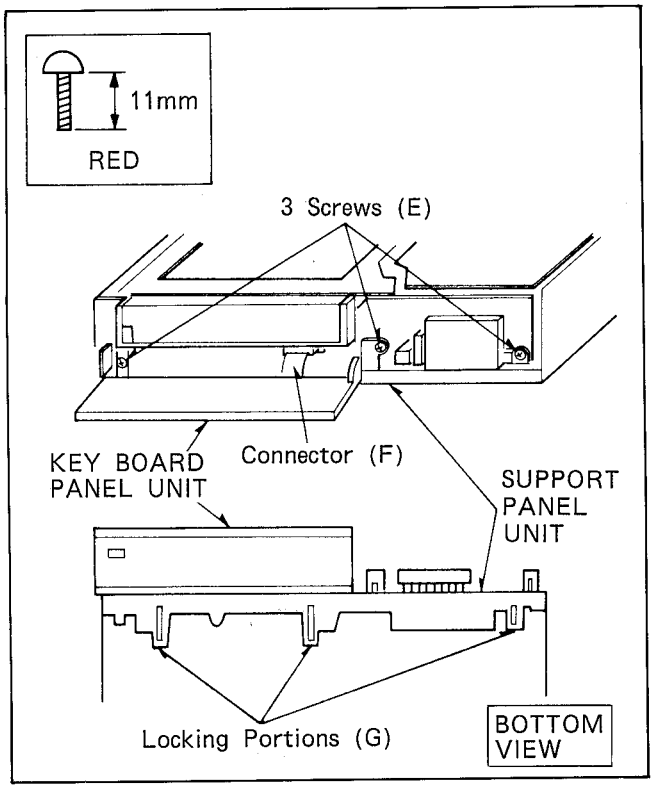

Fig. D5

Remove ... 3 Screws (E)
Disconnect ... Connector (F)
Unlock ... 3 Locking Portions (G)

5. REMOVAL OF THE TIMER C.B.A. AND OPERATION C.B.A.

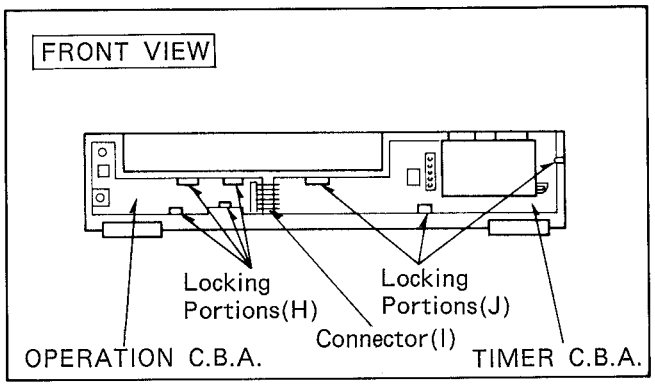

Fig. D6

REMOVAL OF THE OPERATION C.B.A.

Unlock ... 4 Locking Portions(H)

REMOVAL OF THE TIMER C.B.A.

Unlock ... 3 Locking Portions(J)
Disconnect ... Connector(I)

6. REMOVAL OF THE MAIN C.B.A. AND POWER SUPPLY UNIT

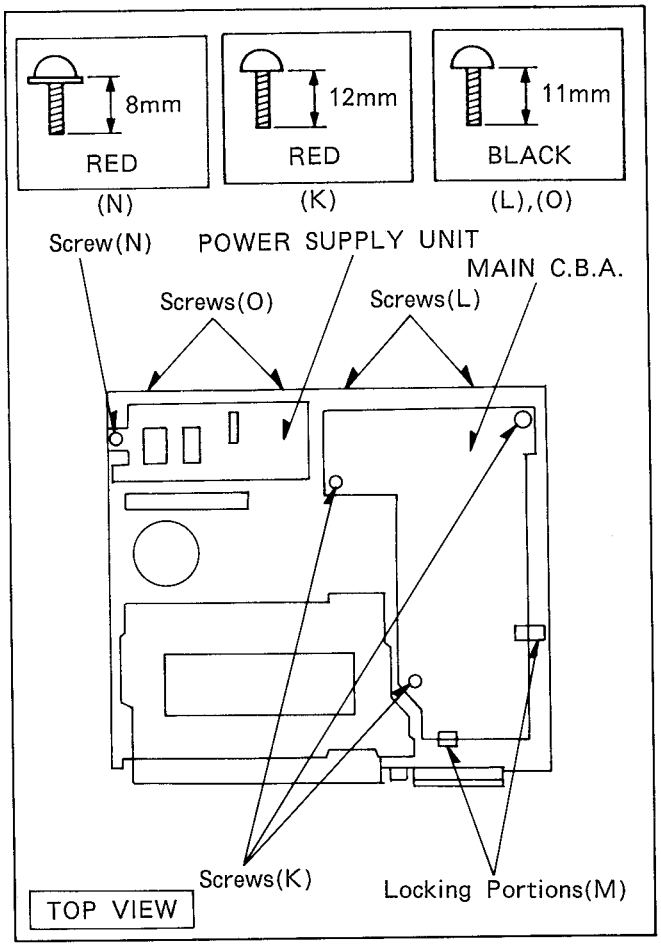

Fig. D7

REMOVAL OF THE MAIN C.B.A.

Remove ... 3 Screws(K) and 2 Screws(L)
Unlock ... 2 Locking Portions(M)

REMOVAL OF THE POWER SUPPLY UNIT

Remove ... Screw(N) and 2 Screws(O)

7.SERVICING

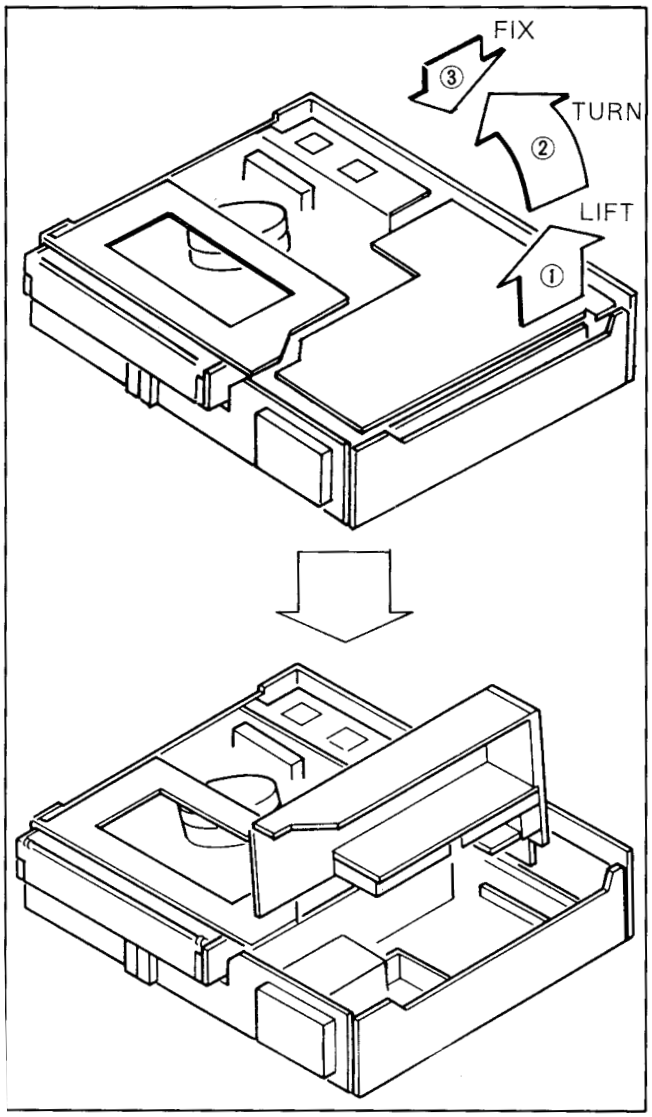

Fig. D8

8. REMOVAL OF THE CASSETTE COMPARTMENT

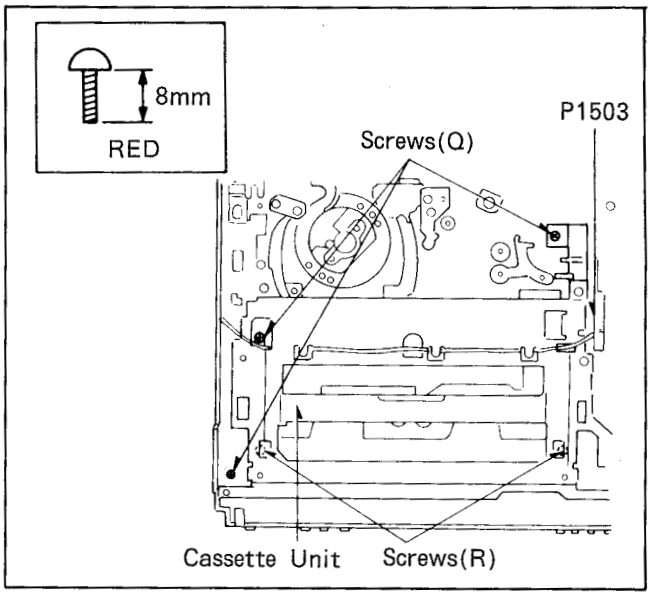

Fig. D9

Remove the 3 screws(Q).
Slide the cassette holder until appearing 2 screws(R) by turning (clockwise) the Capstan Rotor Unit (located in the bottom side as shown in Fig. D10) and remove the 2 screws(R).
Remove the wire cable from connector P1503 mounted on Take-up Photo Tr. C.B.A., then carefully pull out the Cassette Compartment.

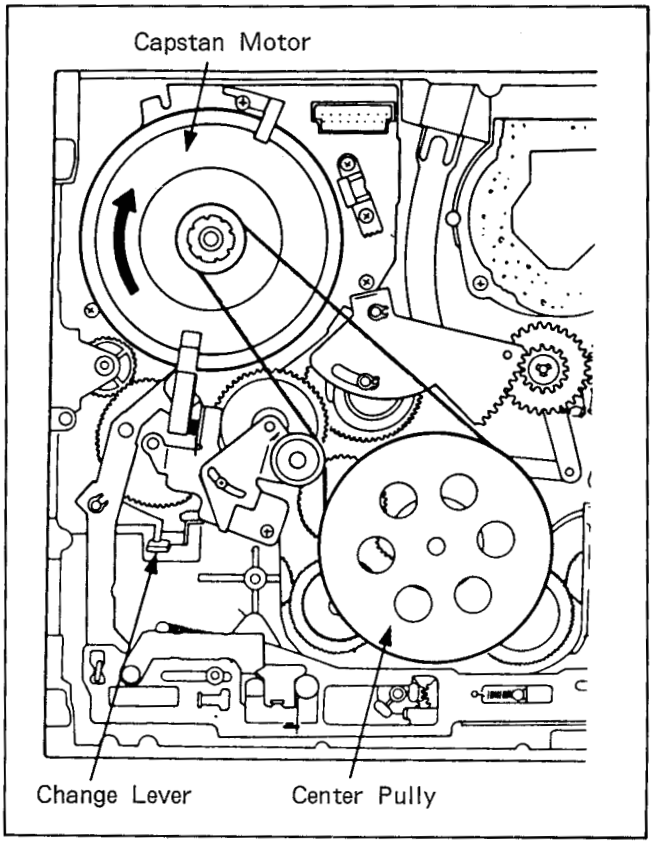

Fig. D10

NOTE:

When restalling the Cassette Compartment, mechanical adjustment (alignment) must be performed for correct working refer to Service Manual (G Mechanical Chassis) (Order No. VRD8901M101 item 2-3-13. mechanical adjustment (alignment).

2-1-3.How to open the Remote Control Unit

1.Removal of the sensor cap.

Turn the sensor cap counterclockwise(90 degrees) and pull the sensor cap to remove as shown in Fig D11.

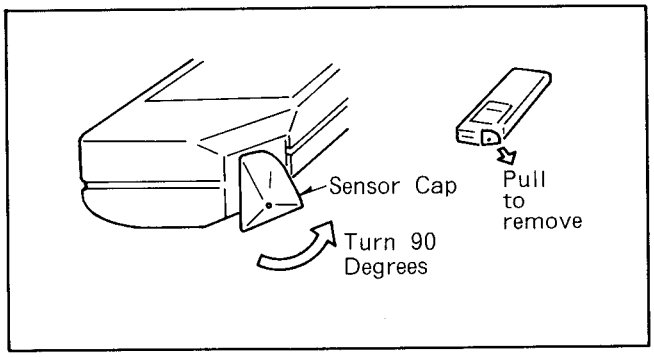

Fig.D11

2.Removal of the Battery Cover

Press the part of battery cover indicated by the arrow and lift off the cover.
Then take out batteries.

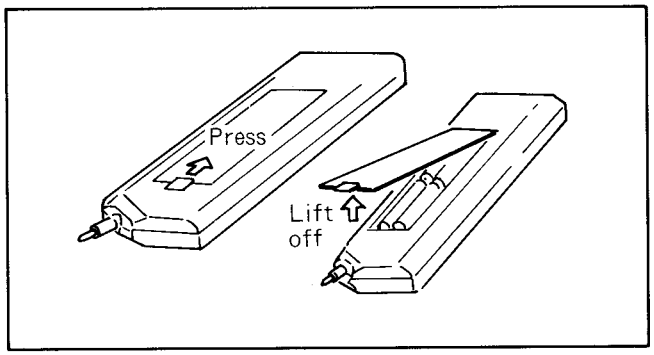

Fig.D12

3.Removal of the bottom case.

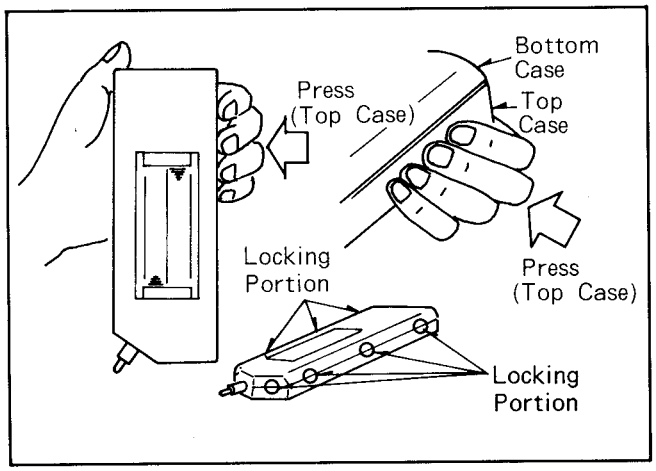

Fig.D13

Press the side of Top case with left hand as shown in Fig.D13 by big force so that the top case is bending.
Then insert your finger of right hand to gap between top case and bottom case while keep pressing by your left hand as shown in Fig.D14.

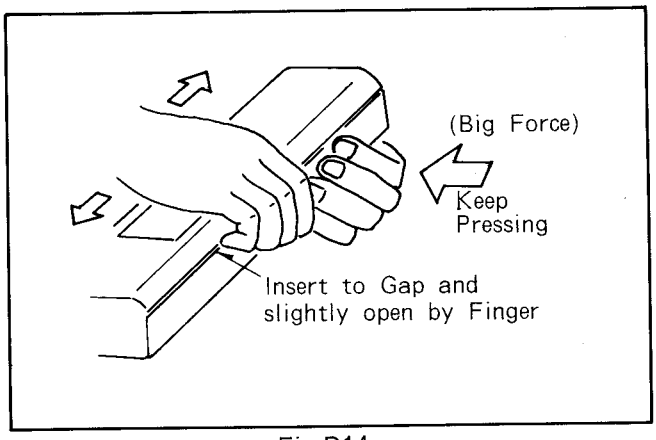

Fig.D14

First slightly open the bottom case by your inserted right hand and move your right hand to extend the open portion.
When unlock the 3 locking portion(refer to Fig.D13),the bottom case is removed easily.
If you can not open,please try opposite side with same way.

4.Removal of the sensor C.B.A.

Remove 2 screws as shown in Fig.D15.

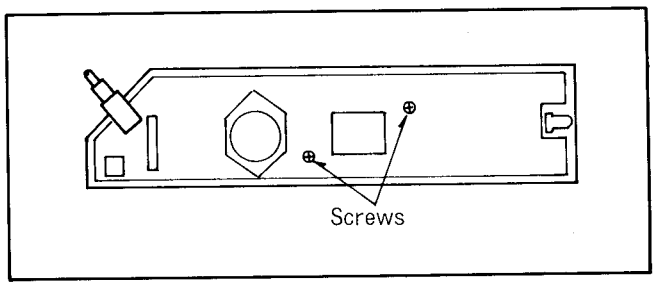

Fig.D15

2-2. MECHANICAL ADJUSTMENT PROCEDURES

This mechanical chassis of these models NV-J35EG/B is the same as G-REV. Mechanical Chassis.
Therefore please refer to the Service Manual G-REV. Mechanical Chassis (Order No. VRD8901M101).

LOCATION OF TEST POINTS & CONTROLS

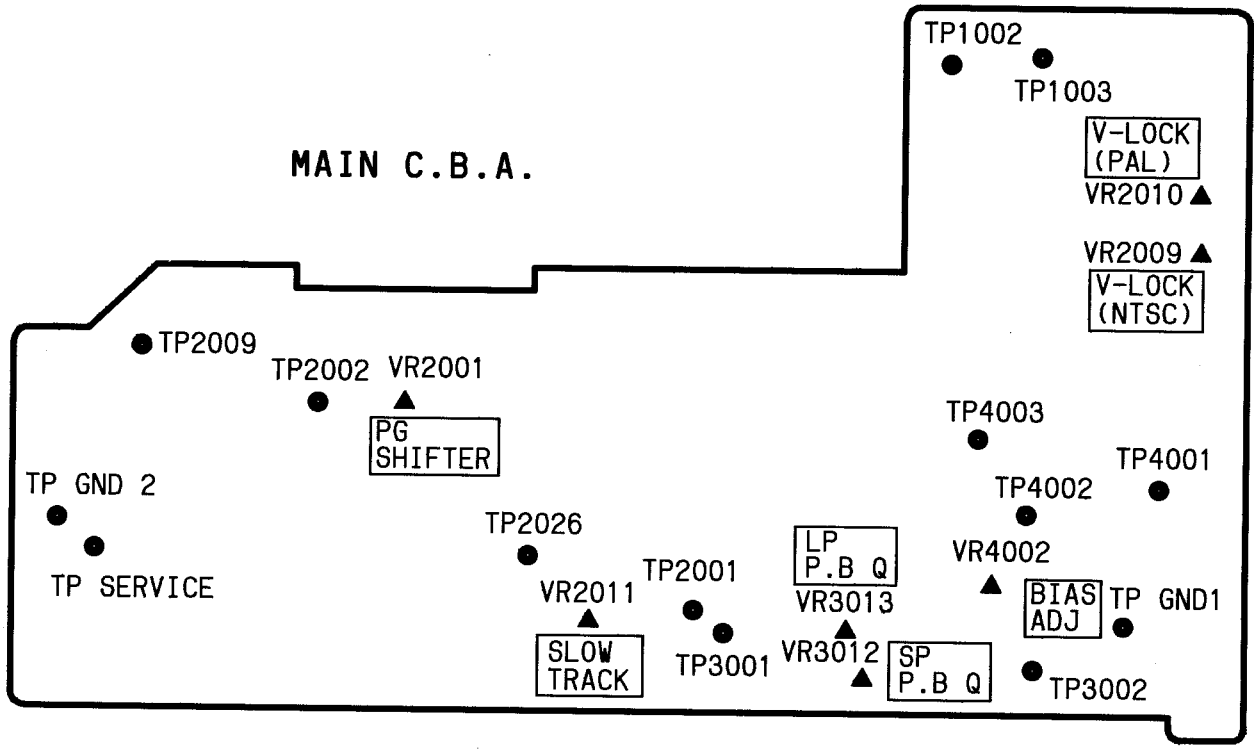

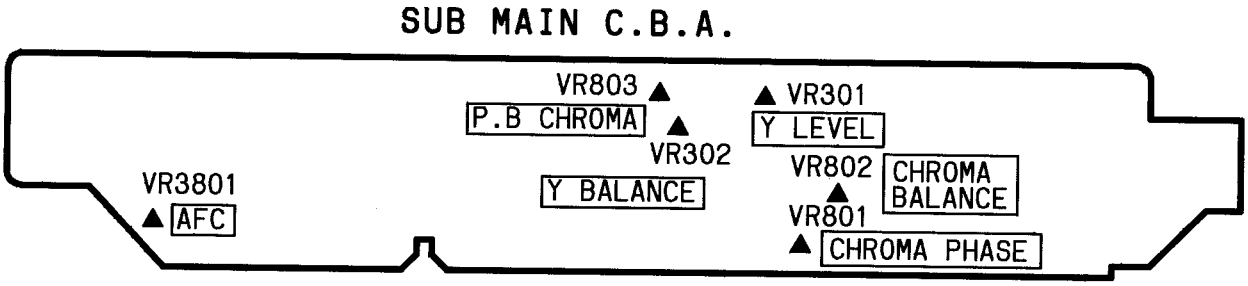

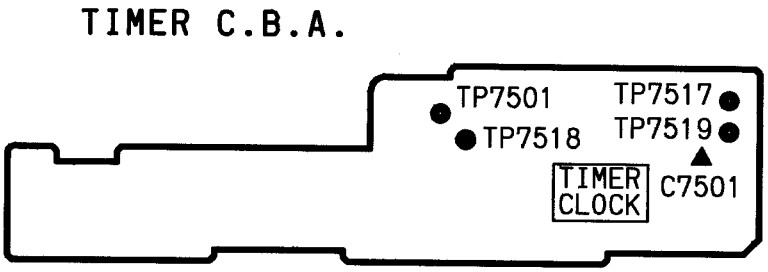

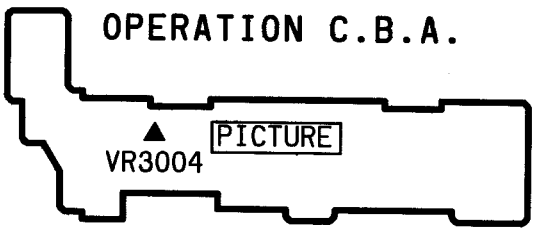

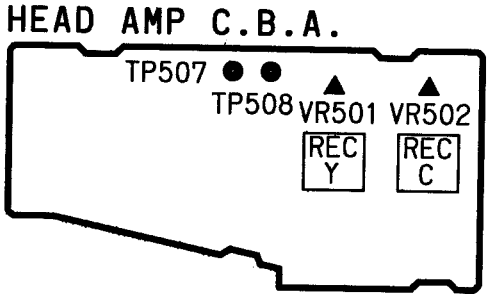

CIRCUIT BOARD LAYOUT

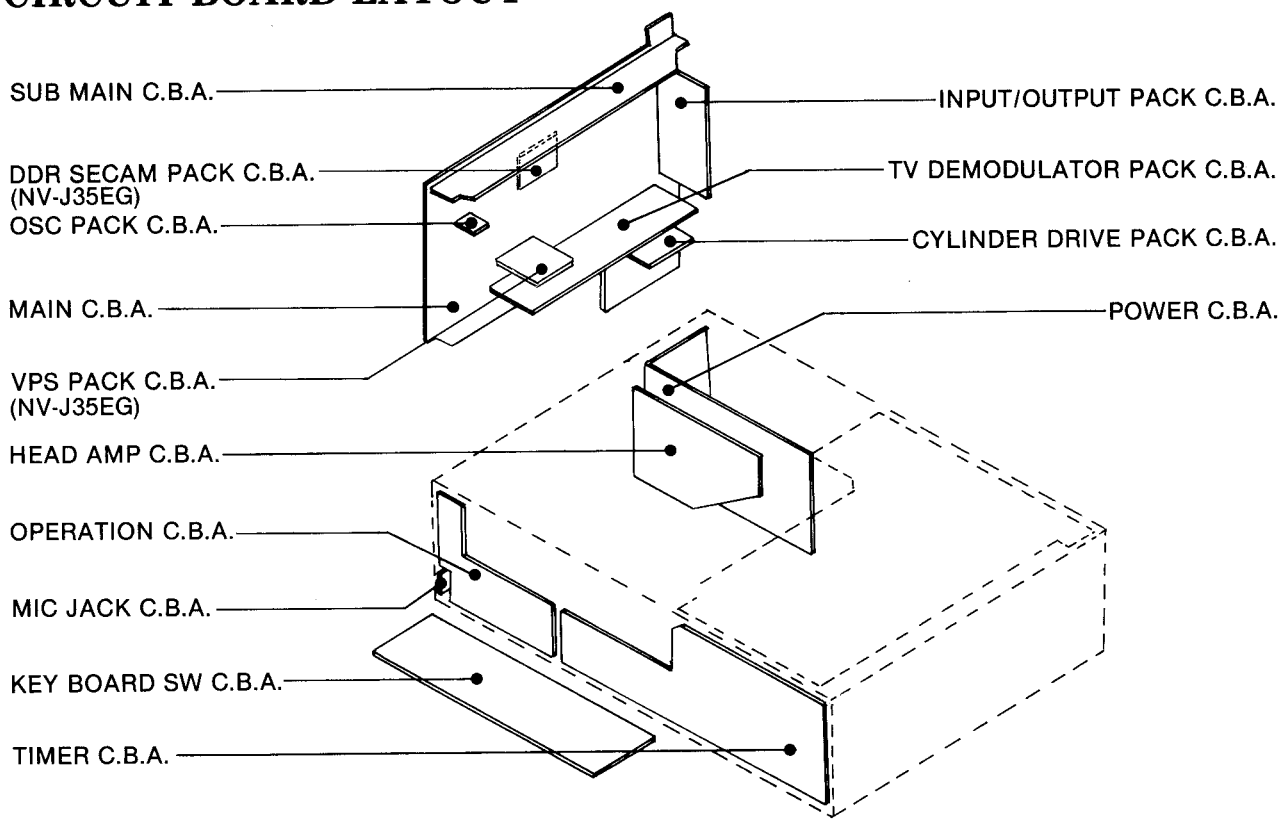

2-3. ELECTRICAL ADJUSTMENT PROCEDURES

This section provides complete electrical adjustment procedures which may be required for electronic circuits of VHS Video Cassette Recorders NV-J35EG/B.

2-3-1. TEST EQUIPMENTS

To perform the electrical adjustments completely, following equipments are required.

1. VTVM (Vacuum Tube Volt Meter) or DVM (Digital Volt Meter)
   Voltage Range: 0.001~50V
2. Dual-Trace Oscilloscope
   Voltage Range: 0.005~50V/div.
   Frequency Range: DC~30MHz
   Probes: 10:1 or 1:1
3. Universal Counter
4. Signal Generator (Sinewave)
   Frequency Range: 0~500KHz
5. Video Sweep Generator
   Frequency Range: 0~10MHz
6. Colour Monitor TV
7. Plastic Tip Driver
8. VHS Alignment Tape (VFJ8125H3F)

2-3-2. HOW TO READ THE ADJUSTMENT PROCEDURES

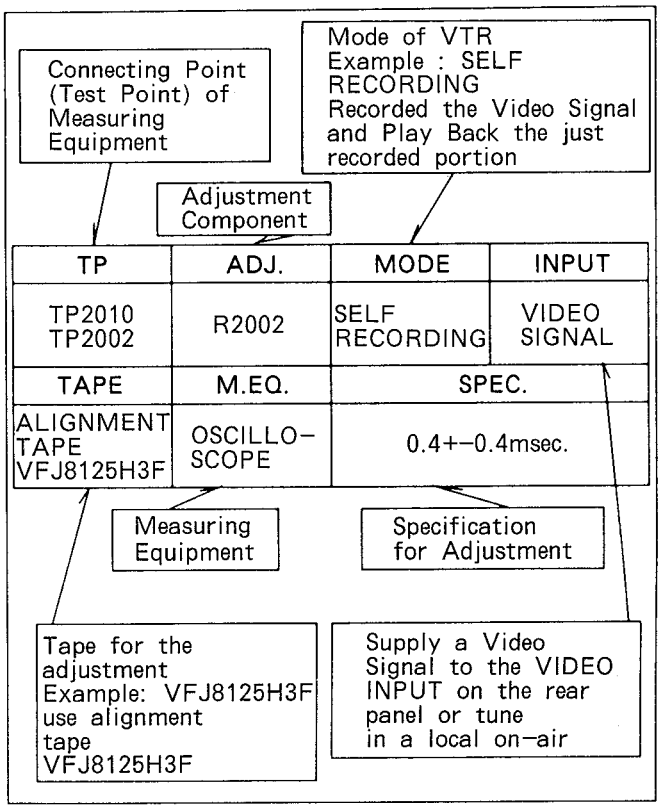

Fig. E1

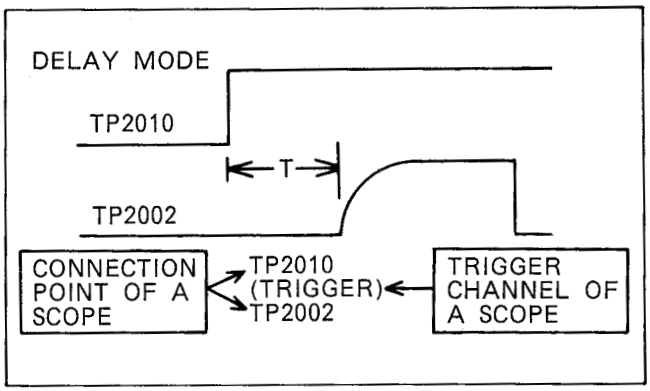

Fig. E2

NOTE:

Before the electrical adjustment, set the VHS VTR as following conditions except for especial instructions in each adjustment item.

1) Picture Sharpness Control...Centre Fix Position
2) Test Signal Switch...OFF Position
3) Noise Filter/Edit Switch...OFF Position
4) Digital Tracking On/Off Switch...ON Position
5) RF Level Switch...HIGH Position.
6) Channel Selection Up and...AV Mode (CH 0) Down Buttons.

SERVO SECTION

2-3-3. PG SHIFTER ADJUSTMENT

TP	ADJ.	MODE	INPUT
TP2001 I/O PACK-13 (VIDEO OUT)	VR2001	PLAY	
TAPE	**M. EQ.**	**SPEC.**	
ALIGNMENT TAPE VFJ8125H3F	OSCILLO-SCOPE	6.5+-0.5H(NV-J35EG) 7.0+-0.5H(NV-J35B)	

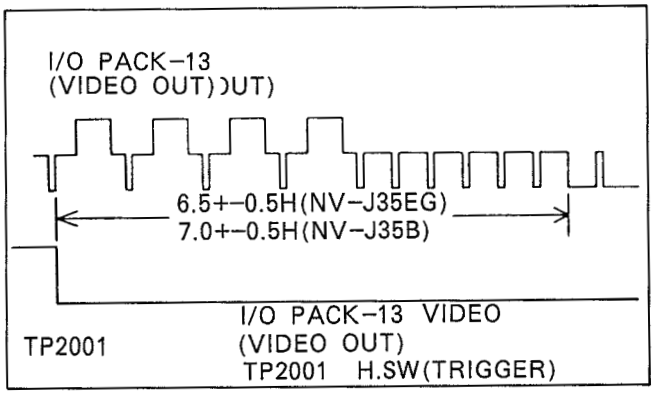

Fig. E3

2-3-4. ARTIFICIAL V-SYNC ADJUSTMENT

TP	ADJ.	MODE	INPUT
	VR2010	SELF RECORDING	VIDEO SIGNAL
TAPE	**M. EQ.**	**SPEC.**	
BLANK TAPE	TV MONITOR		

1. Playback the just recorded portion and place the deck in STILL mode.
2. Adjust the VR2010 so that the V-dancing does not appear on the TV monitor screen.

2-3-5. SLOW TRACKING ADJUSTMENT

TP	ADJ.	MODE	INPUT
TP2002 TP2020	VR2011(SP)	SLOW	COLOUR BAR
TAPE	**M. EQ.**	**SPEC.**	
BLANK TAPE	OSCILLO-SCOPE	20+-2 (msec) (SP)	

1. Connect the Oscilloscope to TP2002 and TP2020.
2. Set the Slow Tracking VR to Fix position.
3. Record the Colour Bar in SP Mode and playback the just recorded portion.
4. Adjust VR2011 so that the phase difference becomes 20+-2 (msec) as shown in Fig. E4.

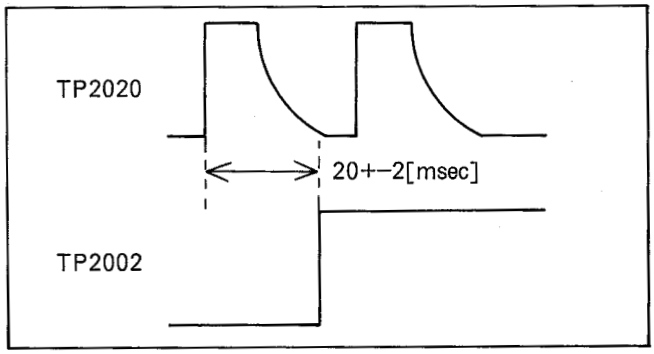

Fig. E4

2-3-6.ARTIFICIAL V-SYNC FOR ARTIFICIAL NTSC ADJUSTMENT

TP	ADJ.	MODE	INPUT
MONITOR SCREEN	VR2009	SP STILL	VIDEO SIGNAL
TAPE	**M. EQ.**	**SPEC.**	
BLANK TAPE	MONITOR	NO V-DANCING	

1.Playback the NTSC recorded tape and place the unit in STILL mode.
2.Adjust VR2009 so that the V-Dancing does not appear on the monitor screen.

LUMINANCE, CHROMINANCE & HEAD AMP SECTION

2-3-7. LUMINANCE RECORDING CURRENT ADJUSTMENT

TP	ADJ.	MODE	INPUT
TP507(HOT) TP508(GND)	VR501	RECORDING	VIDEO SIGNAL
TAPE	**M. EQ.**	**SPEC.**	
BLANK TAPE	OSCILLO-SCOPE	130+-5mVp-p	

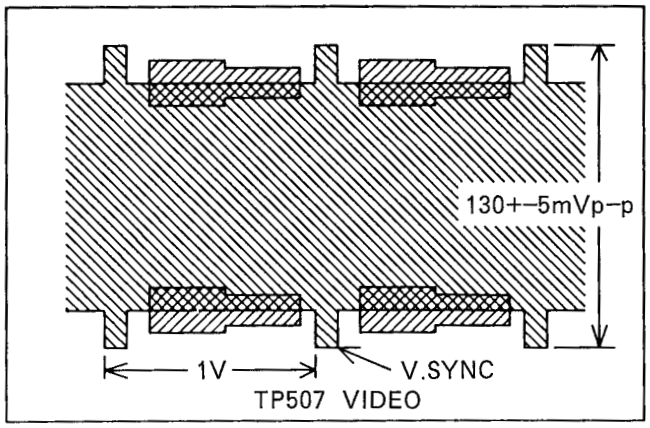

Fig. E5

2-3-8. CHROMINANCE RECORDING CURRENT ADJUSTMENT

TP	ADJ.	MODE	INPUT
TP507(HOT) TP508(GND)	VR502	RECORDING	VIDEO SIGNAL
TAPE	**M. EQ.**	**SPEC.**	
BLANK TAPE	OSCILLO-SCOPE	32+-2mVp-p	

1. Connect the oscilloscope to TP507(HOT) and TP508(GND).
2. Connect a jumper wire between P3001-1 and GND. And then place the unit to Recording mode.
3. Adjust VR502, so that chroma level becomes 32+-2mVp-p.

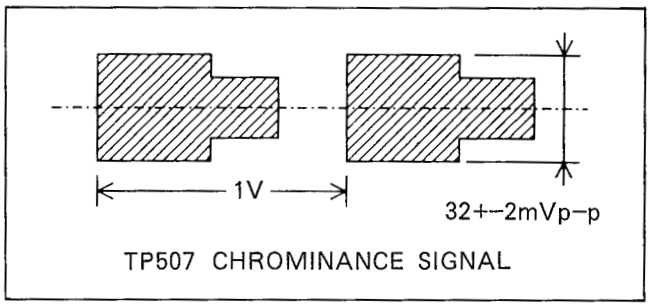

Fig. E6

2-3-9. HEAD AMP FREQUENCY RESPONSE ADJUSTMENT

TP	ADJ.	MODE	INPUT
I/O PACK-13 (VIDEO OUT)	VR3012(SP) VR3013(LP)	SELF RECORDING	VIDEO SWEEP
TAPE	**M. EQ.**	**SPEC.**	
BLANK TAPE	VIDEO SWEEP/ OSCILLO-SCOPE		

1. Set the sweep generator output as shown in below.

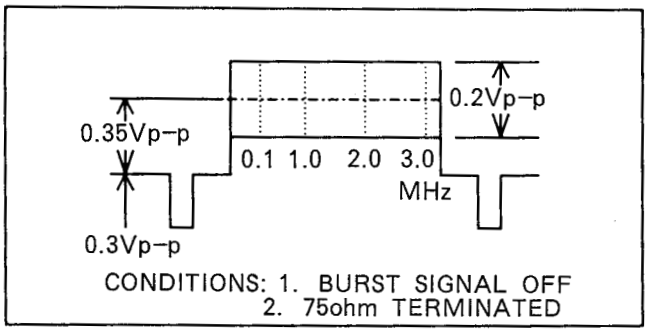

Fig. E7

2. Picture Sharpness Control is centre fix position.
3. Adjust the VR3012:SP(VR3013:LP) so that the waveform becomes as shown in below.

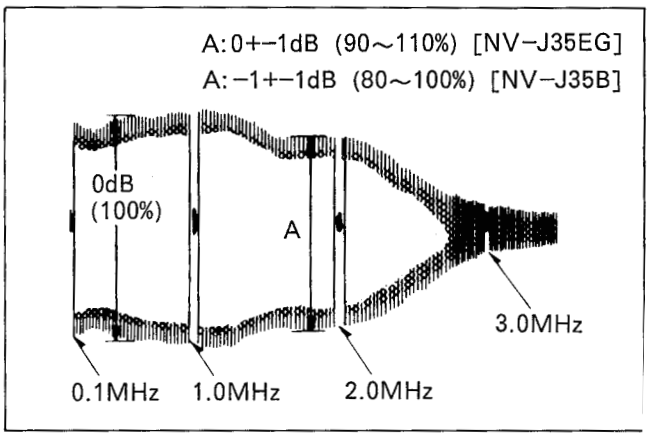

Fig. E8

2-3-10.Y-NR BALANCE ADJUSTMENT (NV-J35B)

TP	ADJ.	MODE	INPUT
IC302-21	VR302	RECORDING (LP MODE)	COLOUR BAR
TAPE	**M. EQ.**	**SPEC.**	
BLANK TAPE	OSCILLO-SCOPE	WAVE-FORM IS MINIMIZED	

1. Record the Colour Bar in LP Mode.
2. Connect the Oscilloscope to IC302-21.
3. Adjust VR302 so that waveform becomes minimum.

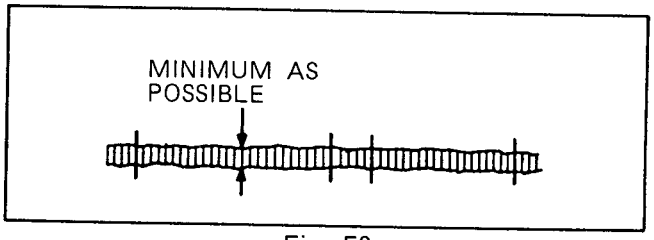

Fig. E9

2-3-11.Y-NR GAIN ADJUSTMENT (NV-J35B)

TP	ADJ.	MODE	INPUT
VIDEO LINE OUT (TP3002)	VR301	SELF RECORDING AND PLAYBACK (LP MODE)	COLOUR BAR
TAPE	**M. EQ.**	**SPEC.**	
BLANK TAPE	OSCILLO-SCOPE	1.0+-0.05 (Vp-p) (75ohm Terminated)	

1. Record the Colour bar in LP Mode.
2. Connect the oscilloscope to VIDEO LINE OUT.
3. Adjust VR301 so that the Video E-E level becomes 1.0+-0.05 (Vp-p).
4. Playback the just recorded portion.
5. Confirm the Video Playback level which is 1.0+-0.05(Vp-p).
6. If the Video Playback level is out of spec., adjust VR301 so that it becomes 1.0+-0.1(Vp-p) and confirm the Video E-E level.

Achieve this adjustment, Video OUT terminal must be terminated with 75ohm.

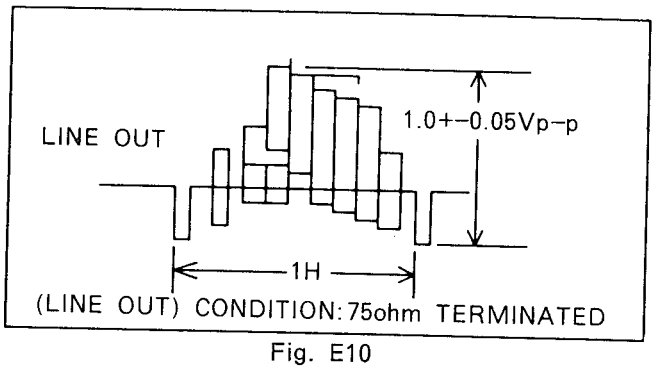

Fig. E10

2-3-12.CHROMA RECURSIVE ADJUSTMENT

TP	ADJ.	MODE	INPUT
IC302-8	VR801 VR802	SELF RECORDING AND PLAYPACK	COLOUR BAR
TAPE	**M. EQ.**	**SPEC.**	
BLANK TAPE	OSCILLO-SCOPE	AMPLITUDE IS MINIMIZED	

1. Record the Colour Bar in SP Mode and playback the just recorded portion.
2. Connect the Oscilloscope to IC302-8.
3. Adjust VR801 and VR802 alternately so that the Chrominance Waveform Amplitude becomes minimum.

Achieve this adjustment after finishing adjustments in REC mode.

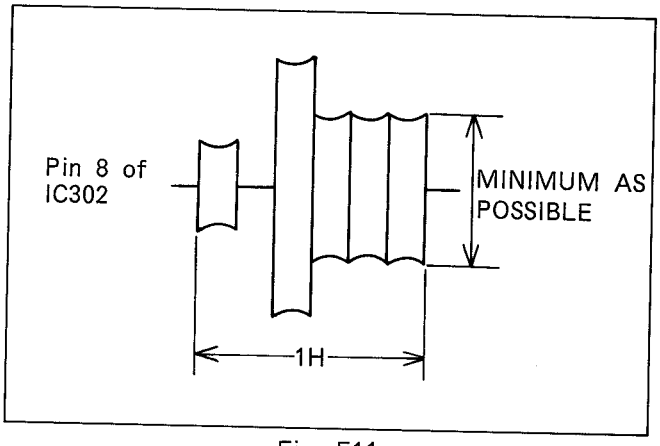

Fig. E11

2-3-13.SECAM KILLER ADJUSTMENT (NV-J35EG ONLY)

TP	ADJ.	MODE	INPUT
IC851-11	T851	RECORDING	SECAM VIDEO SIGNAL
TAPE	**M. EQ.**	**SPEC.**	
BLANK TAPE	OSCILLO-SCOPE	Portion A is peak to negative direction.	

1. Adjust T851 so that the portion "A" becomes maximum waveform.

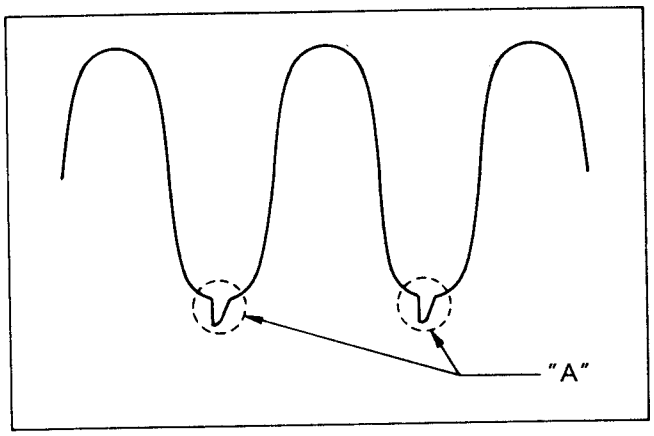

Fig. E12

(NV-J35B)

TP	ADJ.	MODE	INPUT
TP7501	C7501		
TAPE	**M. EQ.**	**SPEC.**	
	UNIVERSAL COUNTER	488.2812+-0.001us	

1. Connect a jumper wire between P7501-10 and 11.
2. Connect a jumper wire between P7501-8 and GND.
3. Connect a diode(MA165) between IC7501-36 and 56.

AUDIO SECTION

2-3-14. AUDIO BIAS CURRENT ADJUSTMENT

TP	ADJ.	MODE	INPUT
TP4002(+) TP4003(-)	VR4002	RECORDING	
TAPE	**M. EQ.**	**SPEC.**	
BLANK TAPE	V.T.V.M.	2.7+-0.1mVrms	

TIMER SECTION

NOTE: Do not connect the AC power plug.

2-3-15.TIMER REFERENCE CLOCK ADJUSTMENT
(NV-J35EG)

TP	ADJ.	MODE	INPUT
TP7501	C7501		
TAPE	**M. EQ.**	**SPEC.**	
	UNIVERSAL COUNTER	7812.5+-0.015us	

1. Connect a jumper wire between P7501-10 and 11.
2. Connect a jumper wire between P7501-8 and GND.

SECTION 3
BLOCK DIAGRAMS & SCHEMATIC DIAGRAMS
3-1. LUMINANCE & CHROMINANCE BLOCK DIAGRAM

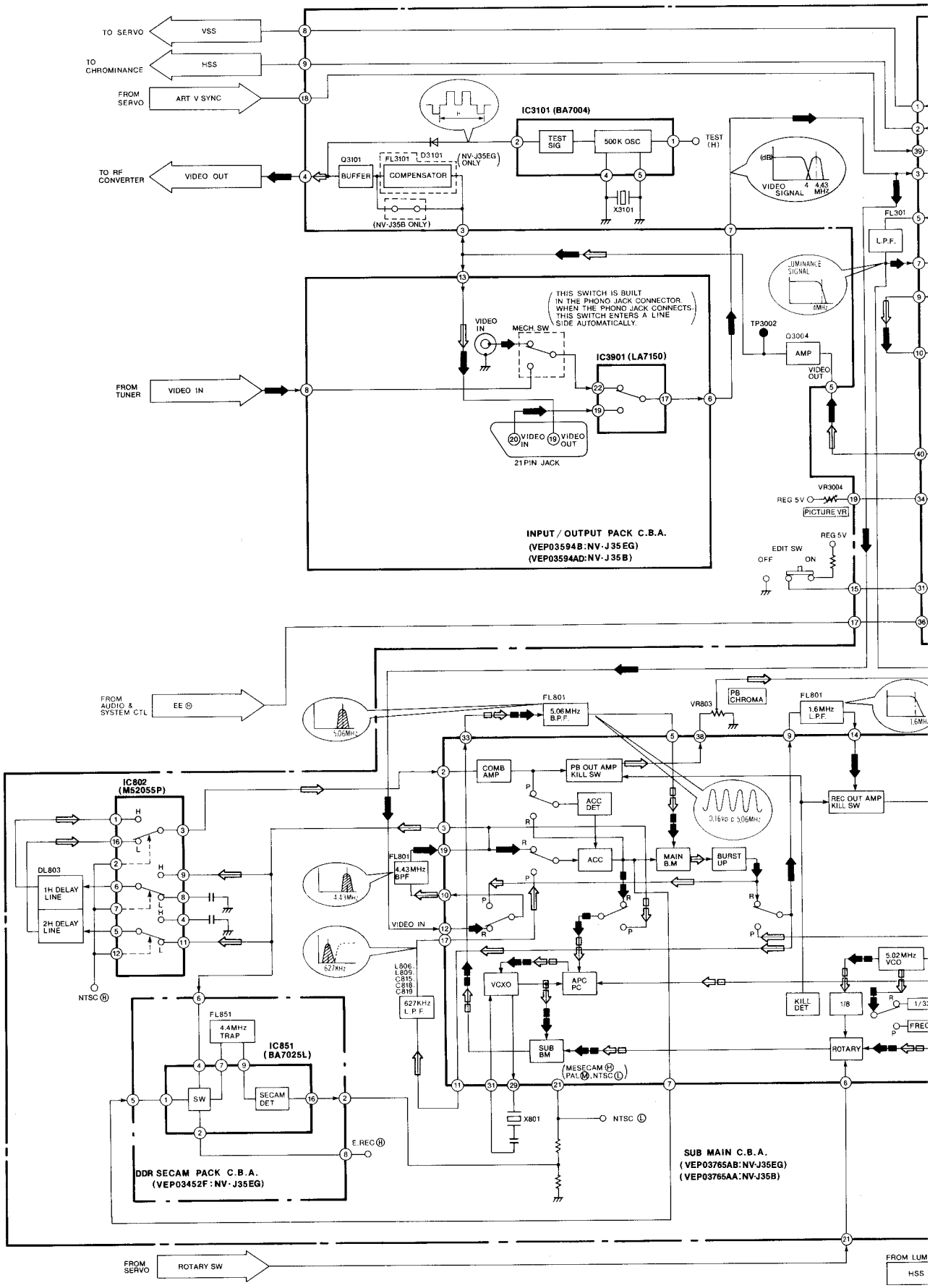

MAIN SIGNAL PATH IN REC MODE

MAIN SIGNAL PATH IN PLAYBACK MODE

5.06MHz PHASI

5.06MHz PHASI

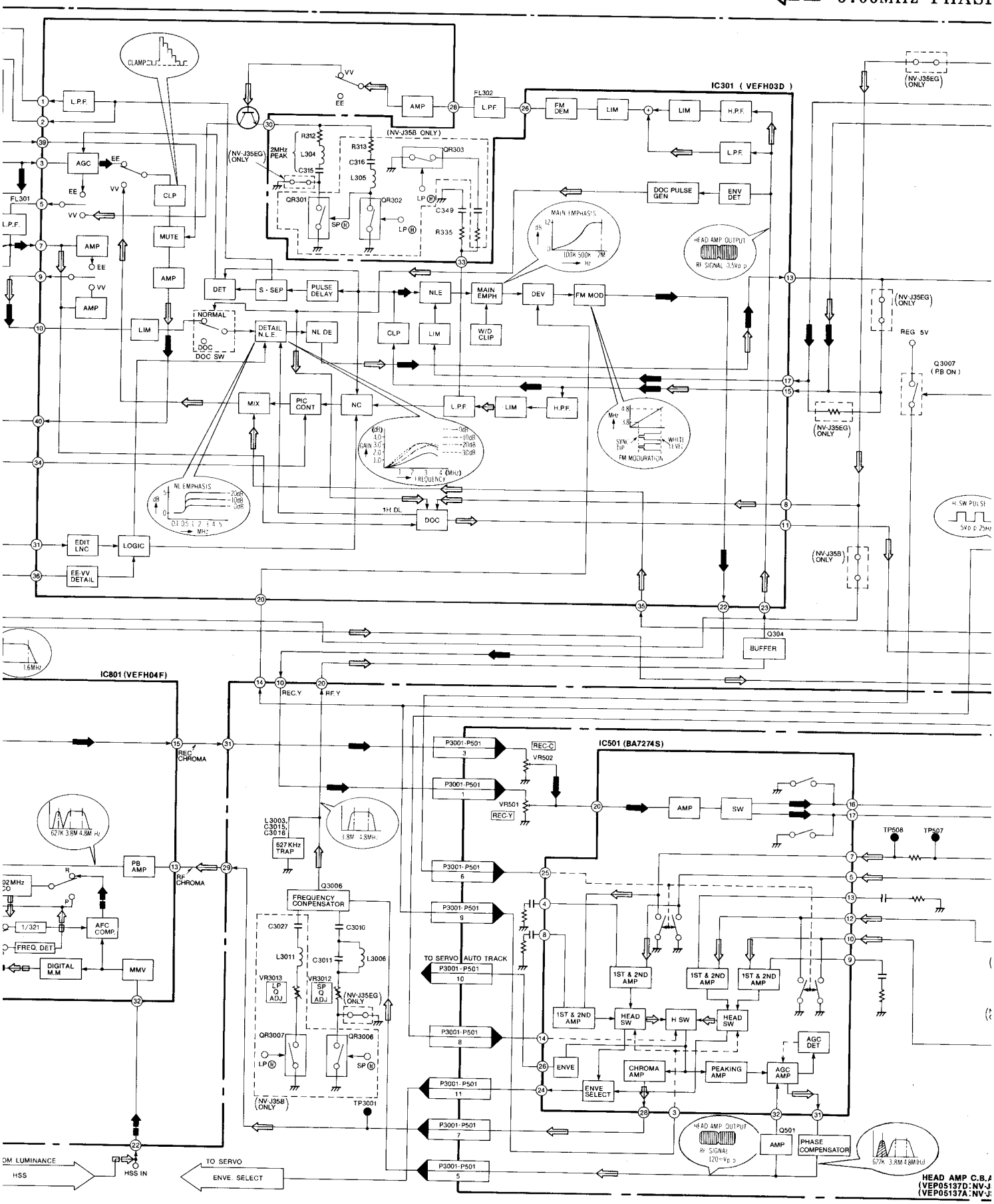

z PHASE ROTATIONAL SIGNAL IN REC MODE

z PHASE ROTATIONAL SIGNAL IN PLAYBACK MODE

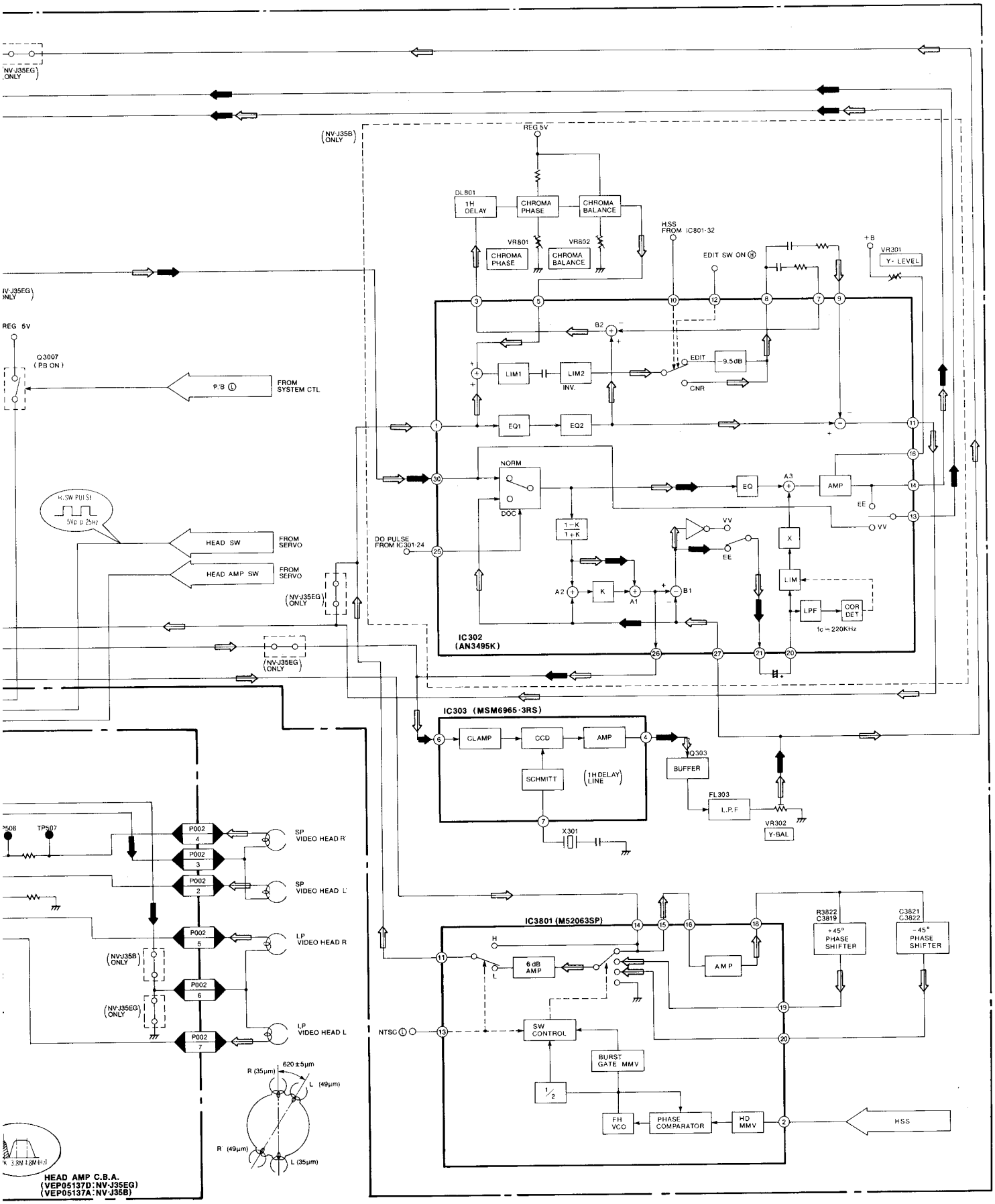

SYMBOL	TRUTH VALUE TABLE

INVERTER

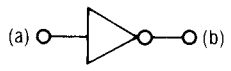

IN	(a)	H	L
OUT	(b)	L	H

COMPARTOR

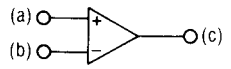

IN	(a) / (b)	(a) > (b)	(a) < (b)
OUT	(c)	H	L

AND CIRCUIT

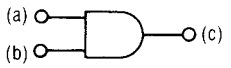

IN	(a)	L	L	H	H
	(b)	L	H	L	H
OUT	(c)	L	L	L	H

OR CIRCUIT

IN	(a)	L	L	H	H
	(b)	L	H	L	H
OUT	(c)	L	H	H	H

THREE STATES BUFFER

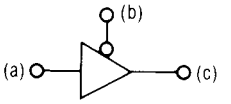

IN	(a)	H	L	H or L
	(b)	L	L	H
OUT	(c)	H	L	※

※ High Impedance

TR. SW (NPN TYPE)

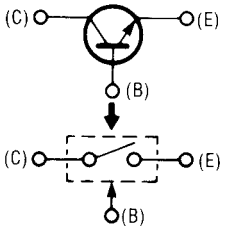

BASE	H	L
TR. SW	ON	OFF

TR. SW (PNP TYPE)

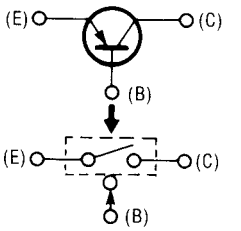

BASE	H	L
TR. SW	OFF	ON

R-S TYPE FLIP-FLOP

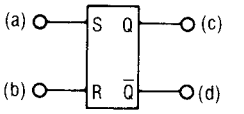

IN	(a)	L	L	⎍
	(b)	L	⎍	L
OUT	(c)	※	L	H
	(d)	◆	H	L

※ Initial condition is maintained.
◆ Initial condition is reverced.

3-2. SYSTEM CONTROL & SERVO BLOCK DIAGRAM

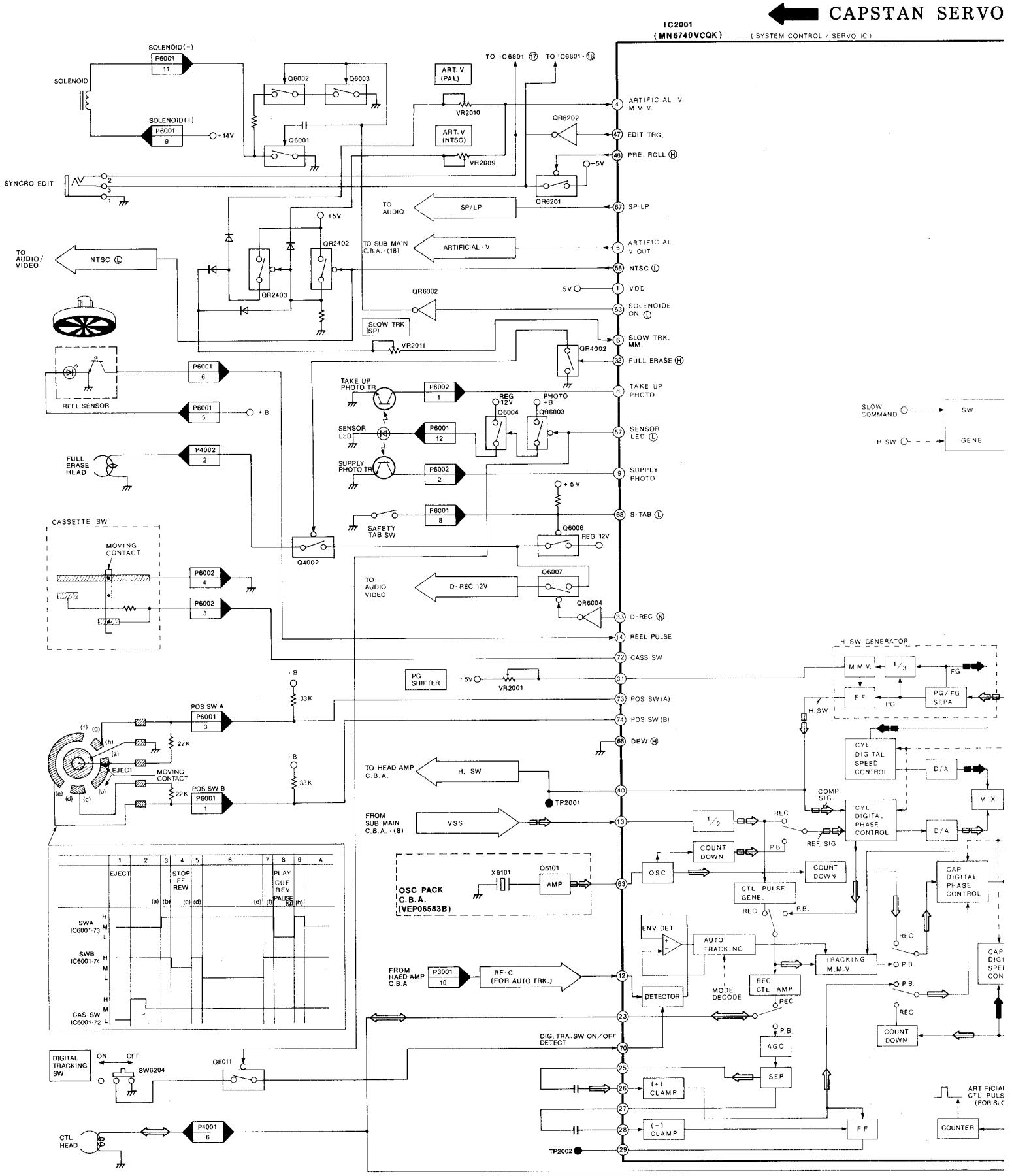

AN SERVO SPEED LOOP ⇦ CAPSTAN SERVO PHASE LOOP ⇦ CYLINDER

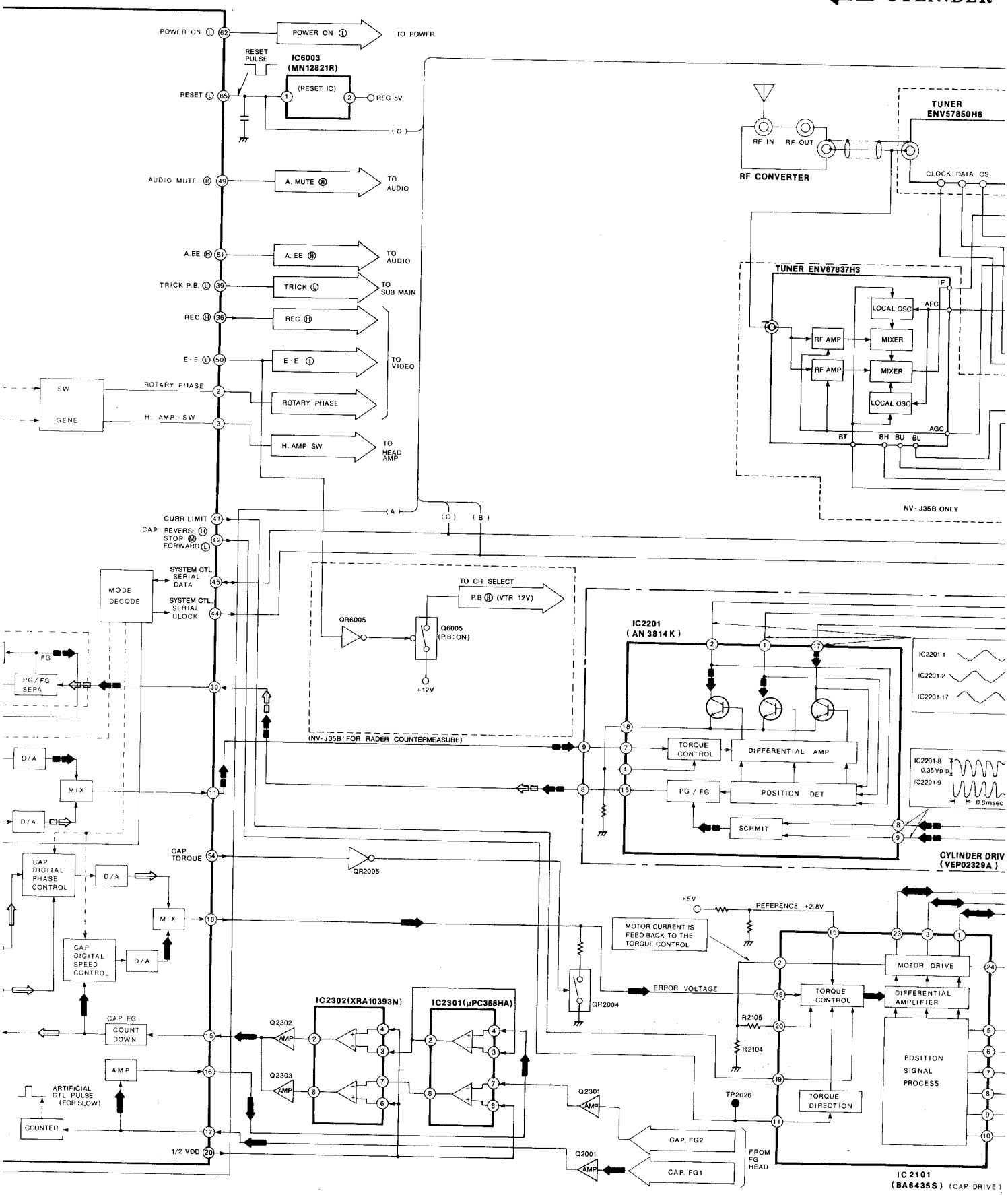

LINDER SERVO SPEED LOOP ⇦ CYLINDER SERVO PHASE LOOP

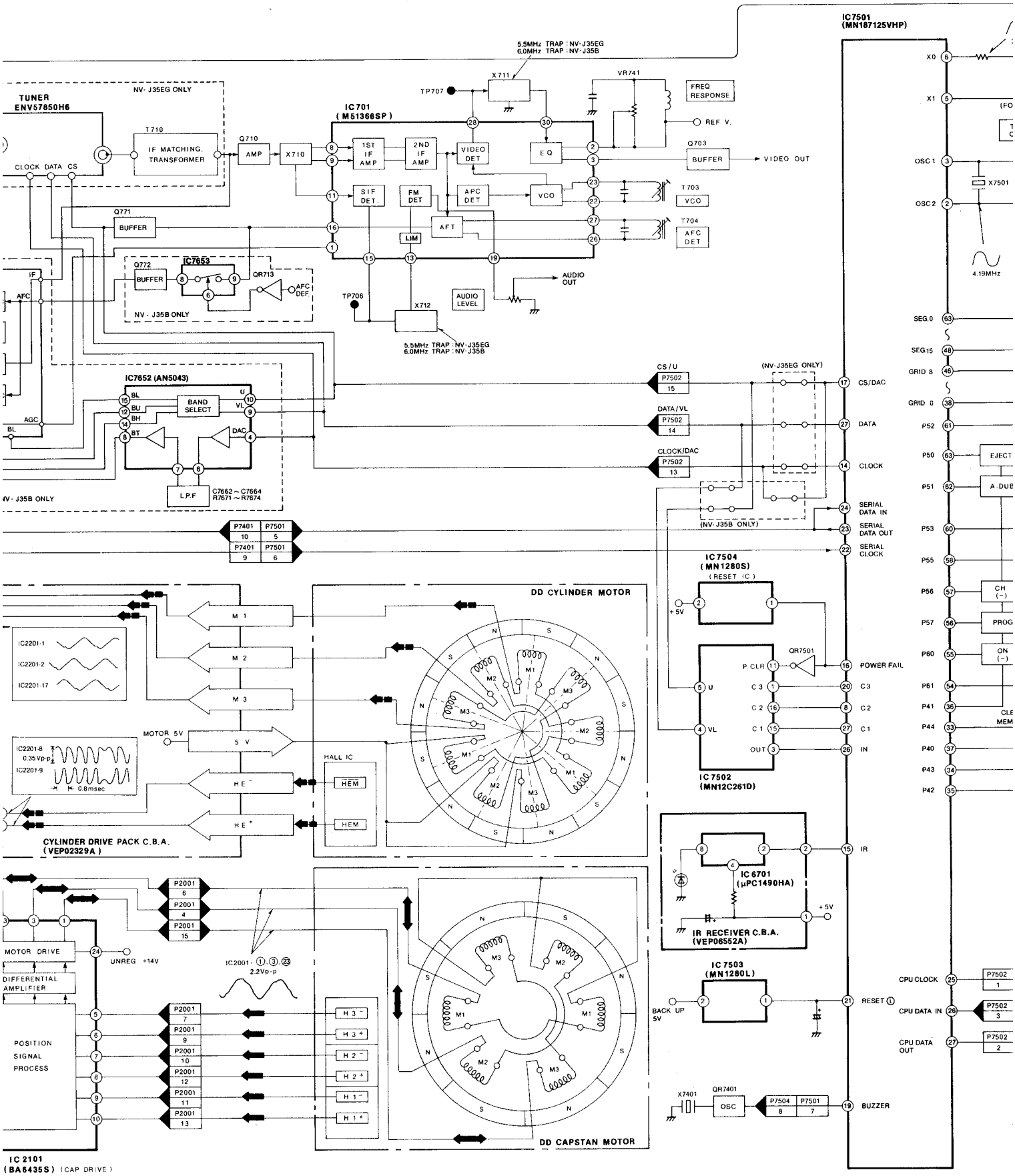

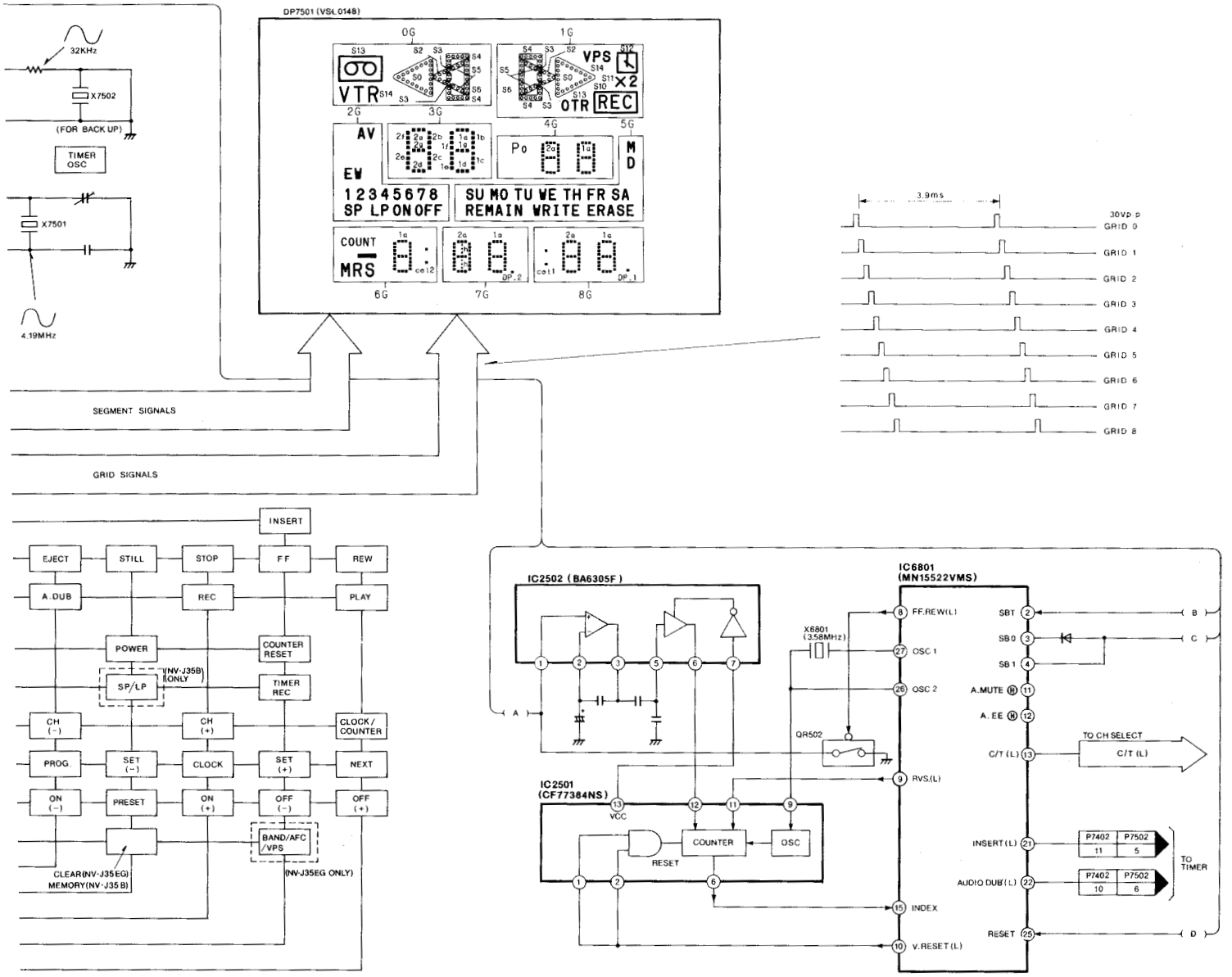
DP7501 (VSL0148)
32KHz
X7502
(FOR BACK UP)
TIMER OSC
X7501
4.19MHz
SEGMENT SIGNALS
GRID SIGNALS
VTR
VPS
OTR
REC
AV
EW
1 2 3 4 5 6 7 8
SP LP ON OFF
SU MO TU WE TH FR SA
REMAIN WRITE ERASE
COUNT
MRS
3.9ms
30Vp-p
GRID 0
GRID 1
GRID 2
GRID 3
GRID 4
GRID 5
GRID 6
GRID 7
GRID 8
INSERT
EJECT
STILL
STOP
FF
REW
A.DUB
REC
PLAY
POWER
COUNTER RESET
SP/LP
(NV-J35B) (ONLY)
TIMER REC
CH (-)
CH (+)
CLOCK/ COUNTER
PROG.
SET (-)
CLOCK
SET (+)
NEXT
ON (-)
PRESET
ON (+)
OFF (-)
OFF (+)
BAND/AFC /VPS
CLEAR(NV-J35EG) MEMORY(NV-J35B)
(NV-J35EG ONLY)
IC2502 (BA6305F)
IC6801 (MN15522VMS)
X6801 (3.58MHz)
QR502
IC2501 (CF77384NS)
VCC
COUNTER
OSC
RESET
FF.REW(L)
OSC 1
OSC 2
RVS.(L)
INDEX
V.RESET(L)
SBT
SB0
SB1
A.MUTE
A.EE
C/T (L)
TO CH SELECT
INSERT (L)
AUDIO DUB (L)
TO TIMER
P7402 11 P7502 5
P7402 10 P7502 6
VPS PACK C.B.A. (VEP07538D)
NV-J35EG ONLY
VPS PACK 4
BACK-UP 5V
SYS.5V
IC7851 (MN158413VSSJ)
RESET
VDD
SBT SB0 SB1 RESET CLK DATA IN DATA OUT RESET
P7502 1 P7402 15 PACK 7
P7502 3 P7402 13 PACK 9
P7502 2 P7402 14 PACK 8
QR7851
IC7852 (MN1280S)
SYS. 5V
RST
QR7852
FROM DEMODULATOR
VIDEO SIGNAL
VPS PACK 2
IC7801 (SAA4700)
RST
WHEN VPS SIGNAL DOESN'T COME TO IC7801-13 (ESPECIALLY OUTPUT SIG AT IC7801-3 IS KEPT TO LOW), THIS IC7851 GENERATES LOW SIG.
TAKT GENERATOR (PLL)
BIPHASE CODE TEST START CODE TEST
SCHIFT REGISTER 40BIT
TRANSMIT REGISTER BANK 5X8 BITS
DATA SLICING
PRE-SCALER
SEQUENCE CONTROL
ADDRESS DECODER
MULTIPLEXER
SYNCHRON PULSE SEPARATOR
CBB GENERATOR AND DECODER FOR LINE16
AUTOM RESET
TEST SIGNAL GENERATOR
I²C-BUS INTERFACE

3-3. POWER SCHEMATIC DIAGRAM

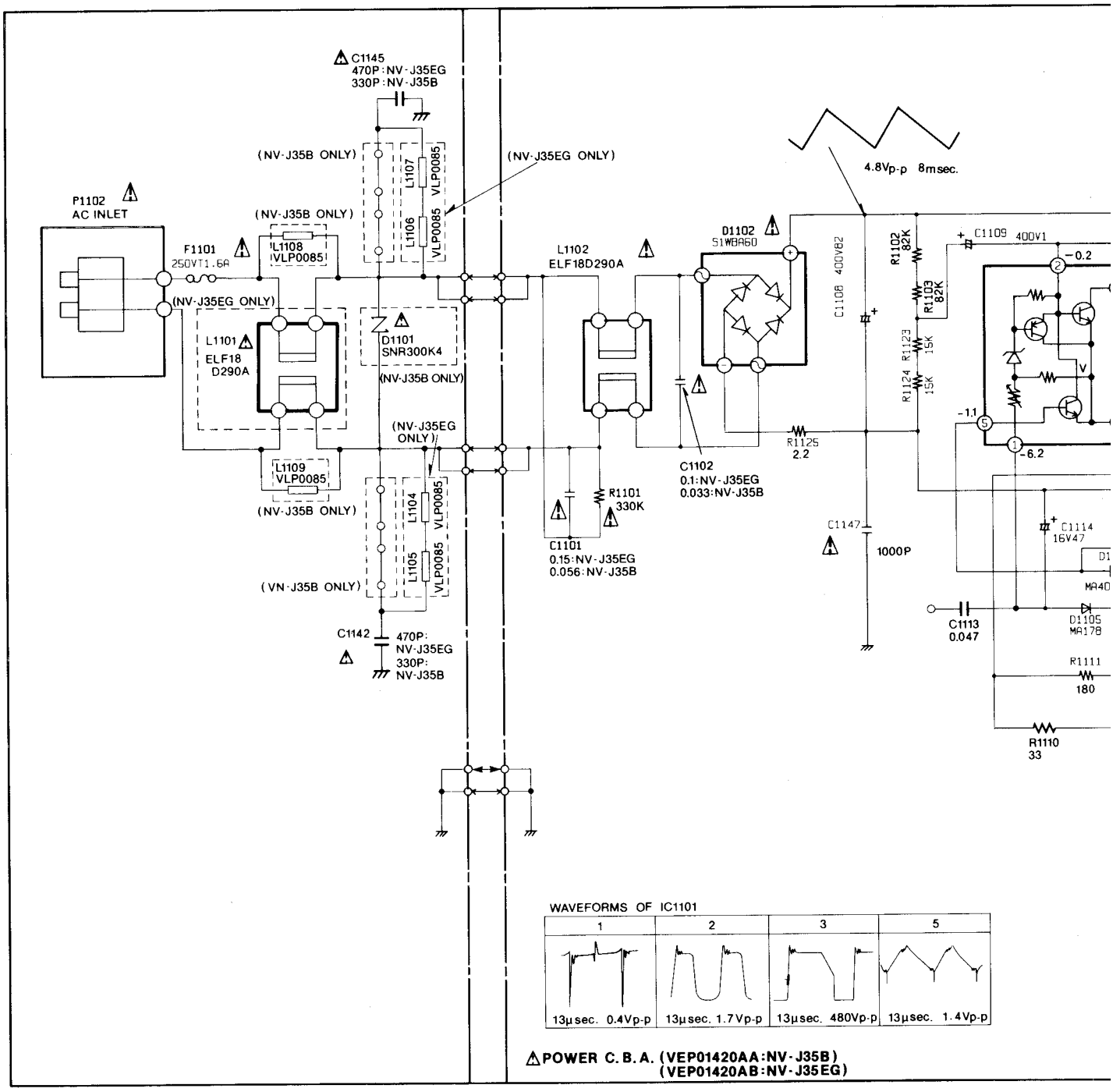

IMPORTANT SAFETY NOTICE:
COMPONENTS IDENTIFIED WITH THE MARK ⚠ HAVE THE SPECIAL CHARACTERISTICS FOR SAFETY.
WHEN REPLACING ANY OF THESE COMPONENTS, USE ONLY THE SAME TYPE.

NOTE: THE MEASUREMENT MODE OF THE DC VOLTAGE ON THIS DIAGRAM IS STOP MODE.

NOTE 1. WHEN MEASURE THE VOLTAGE OR WAVEFORM
CIRCUIT, SET THE GND TERMINAL OF MEASU
PRIMARY SIDE ..... IC1101-(4)
SECONDARY SIDE ... TP GND OF MAIN C.B
NOTE 2. THE DC VOLTAGE INDICATED IN PRIMARY SID
INPUT AC IS 220V.

NOTE: DO NOT USE ANY PART NUMBER SHOWN ON THIS
ORDERING. WHEN YOU ORDER A PART, PLEASE R

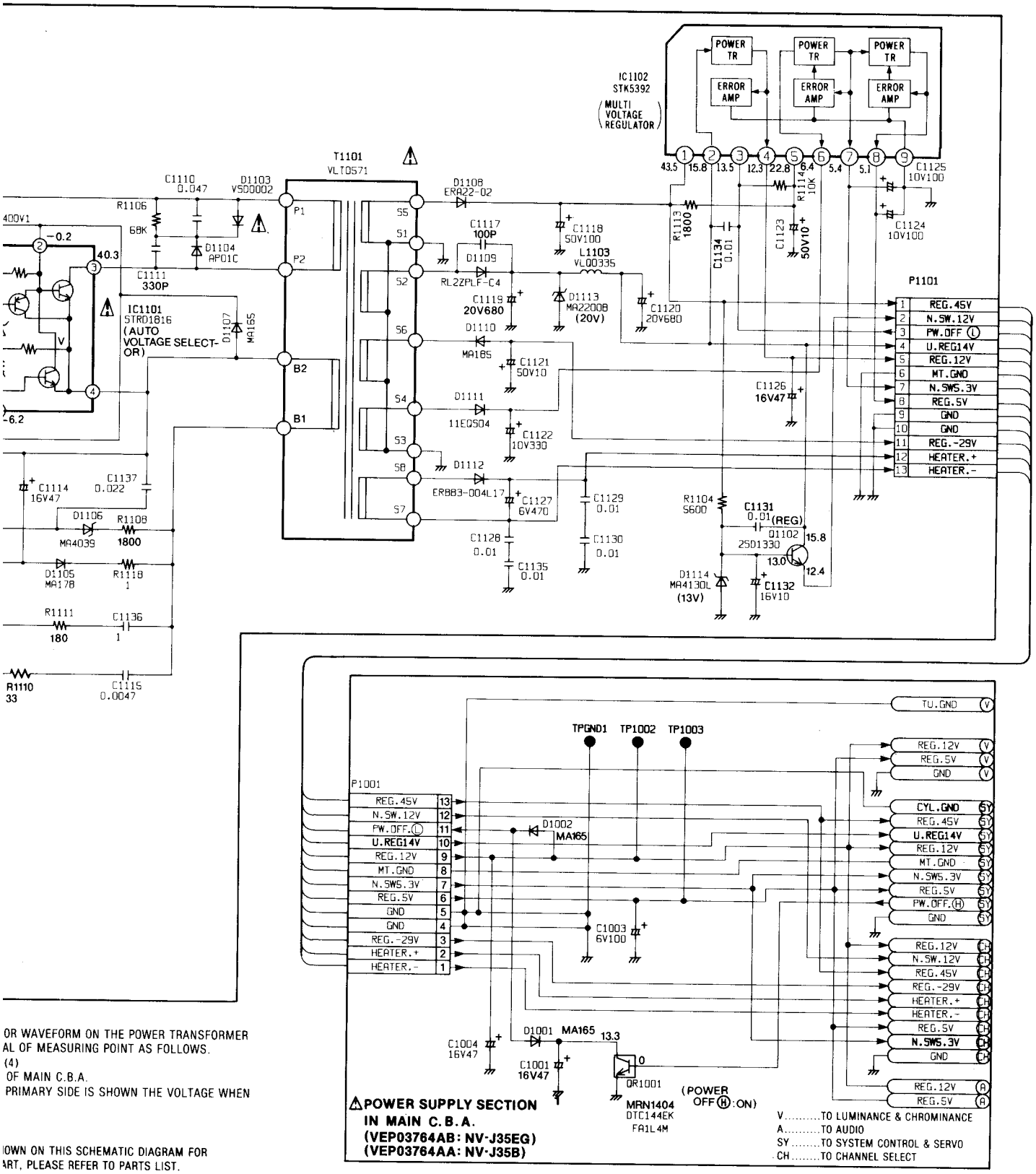

OR WAVEFORM ON THE POWER TRANSFORMER
AL OF MEASURING POINT AS FOLLOWS.
(4)
OF MAIN C.B.A.
PRIMARY SIDE IS SHOWN THE VOLTAGE WHEN

IOWN ON THIS SCHEMATIC DIAGRAM FOR
ART, PLEASE REFER TO PARTS LIST.

6 7 8 9 10 11

3-5. SYSTEM CONTROL & SERVO SCHEMATIC DIAGRAM

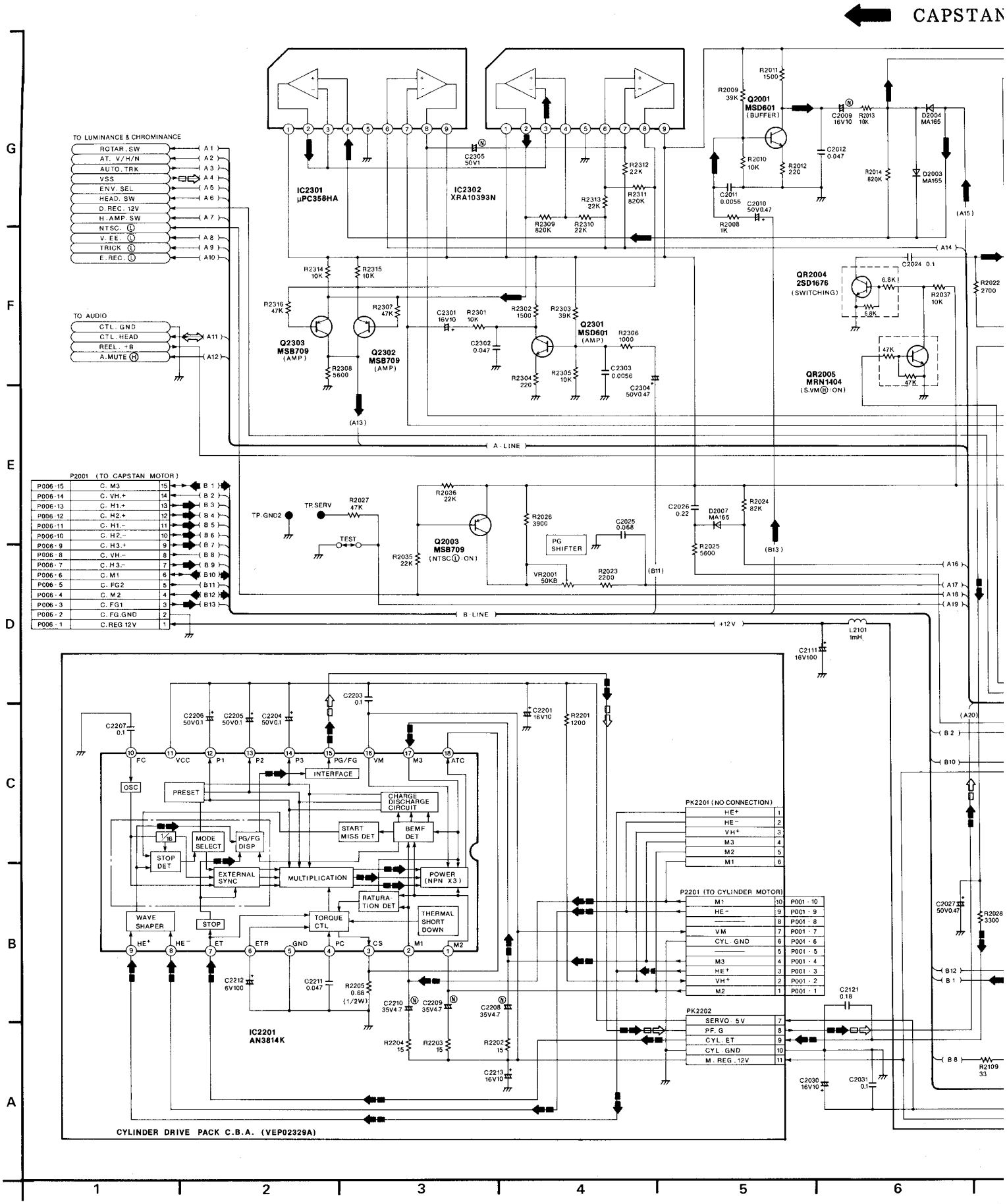

CAPSTAN SERVO SPEED LOOP ⇦ CAPSTAN SERVO PHASE LOOP

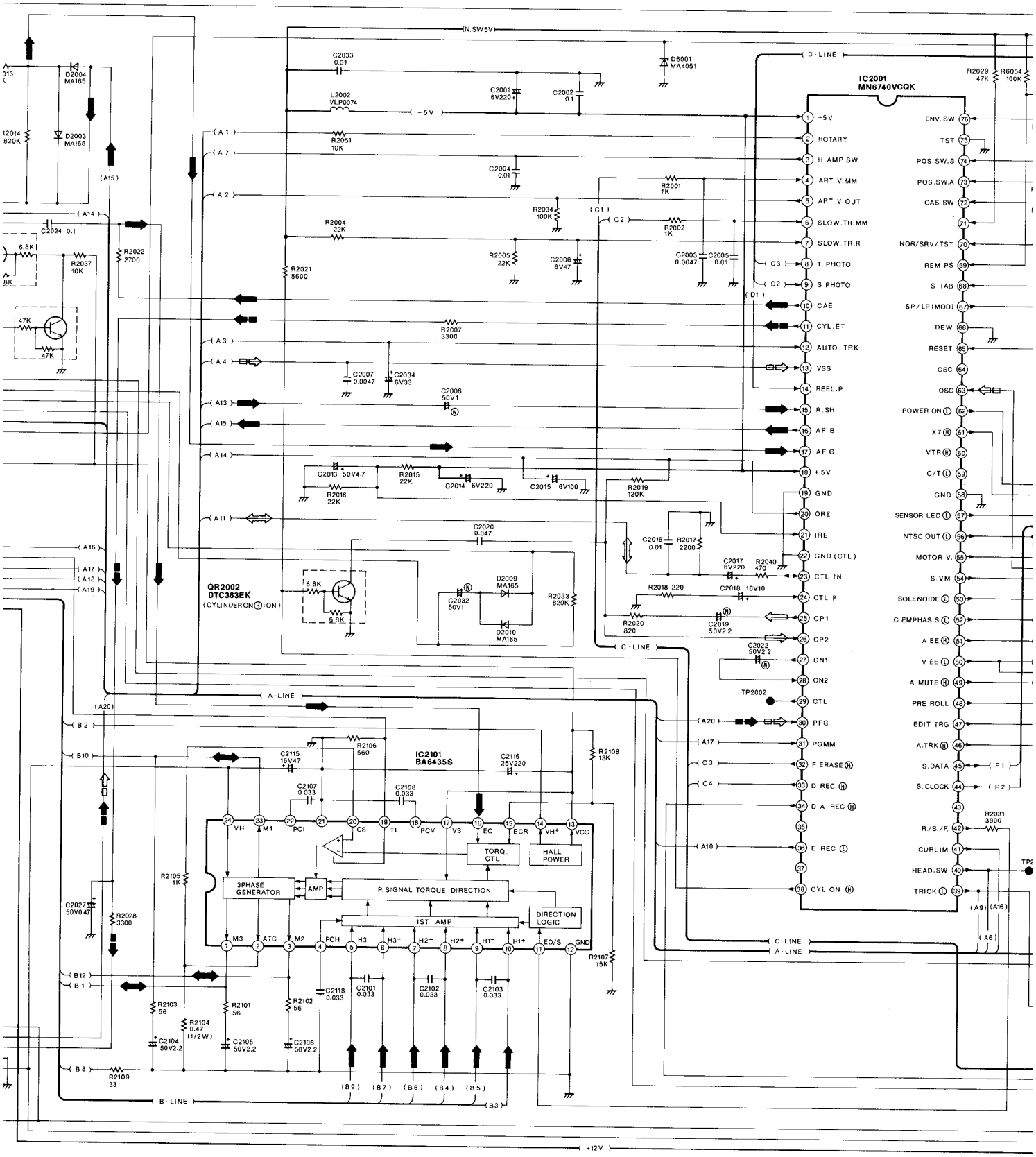

6 7 8 9 10 11 12

CYLINDER SERVO SPEED LOOP

CYLINDER SERVO PHASE LOOP

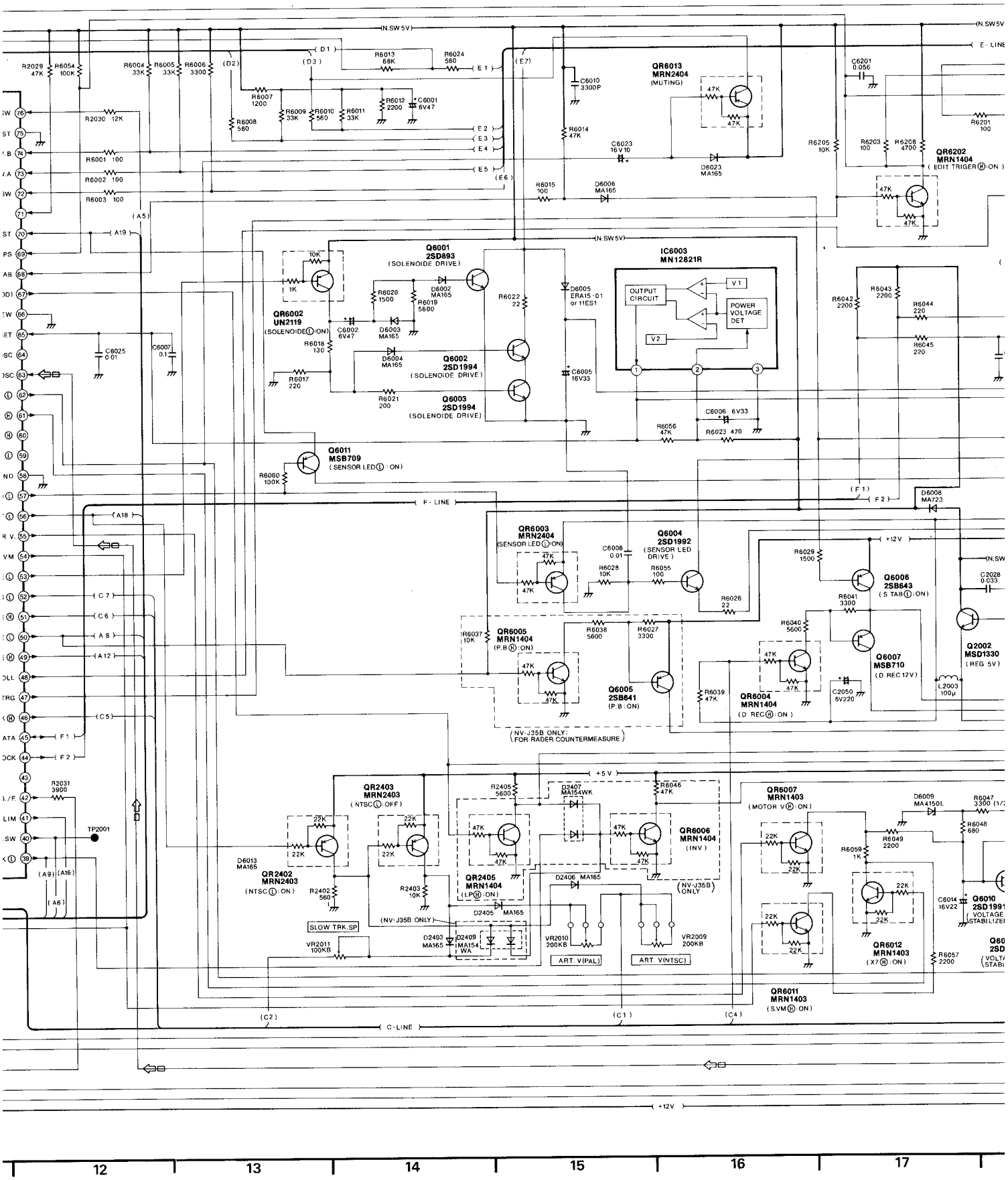

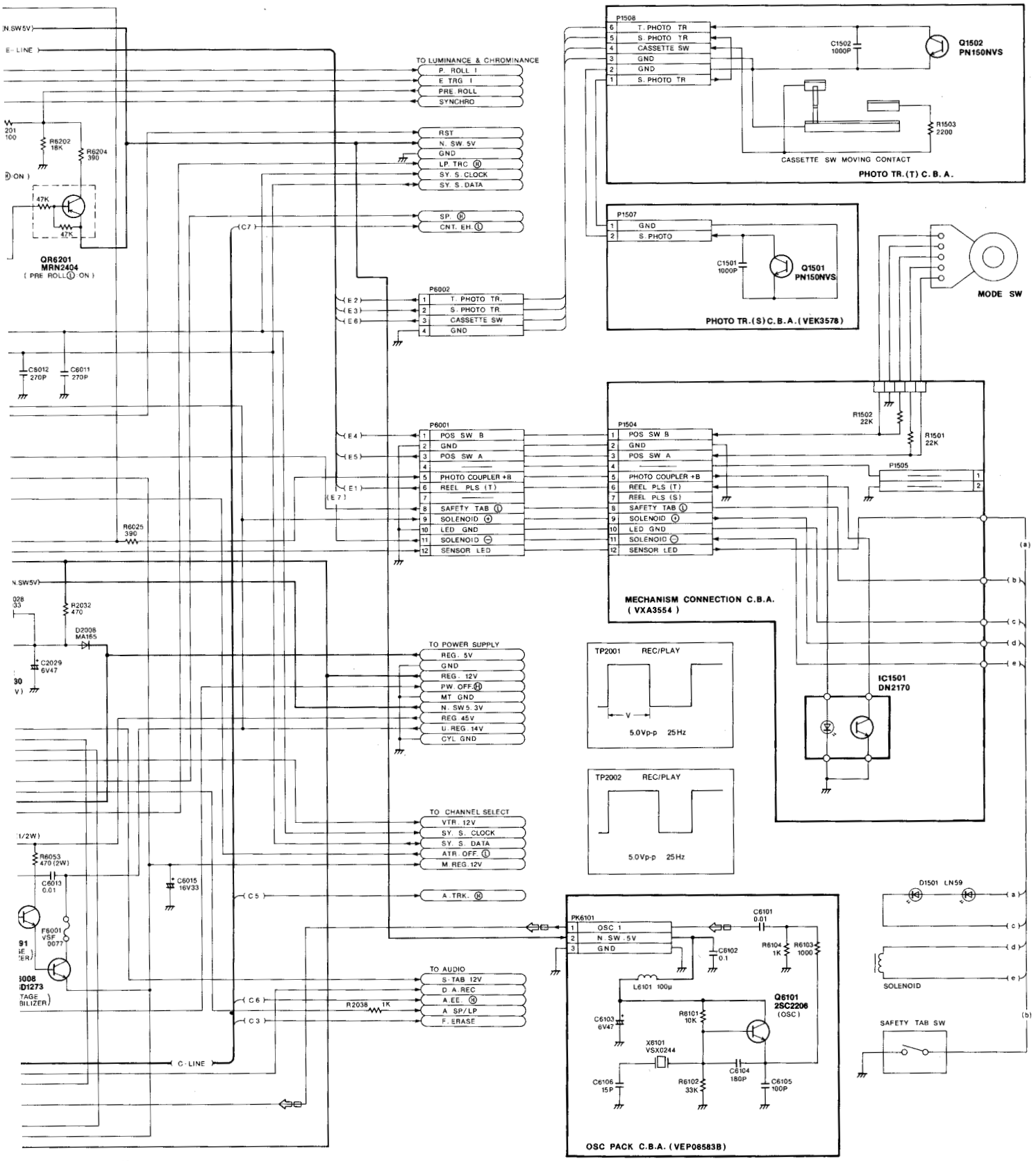

NOTE: DO NOT USE ANY PART NUMBER SHOWN ON THIS SCHEMATIC DIAGRAM FOR ORDERING. WHEN YOU ORDER A PART, PLEASE REFER TO PARTS LIST.

18 | 19 | 20 | 21 | 22 | 23

SYSTEM CONTROL & SERVO ICs DC VOLTAGE CHART

REF. NO.	IC2001																			
MODE	1	2	3	4	5	6	7	8	9	10	11	12	13	14	15	16	17	18	19	20
STOP	5.1	5.1	0	0	0	0	2.5	3.3	3.3	2.5	4.3	1.7	2.5	0.3	2.5	2.5	2.5	5.1	0	2.5
PLAY	5.1	2.6	0	0	0	0	2.5	3.3	3.3	2.5	2.5	2.5	2.5	2.5	2.5	2.5	2.5	5.1	0	2.5
FF	5.1	5.1	0	0	0	0	2.5	3.3	3.3	2.5	4.3	1.7	2.5	1.9	2.5	2.5	2.5	5.1	0	2.5

REF. NO.	IC2001																			
MODE	21	22	23	24	25	26	27	28	29	30	31	32	33	34	35	36	37	38	39	40
STOP	2.5	0	2.5	2.5	1.2	2.9	3.9	2.1	5.1	5.1	0	0	0	0	3.1	0.2	5.1	0	5.1	0
PLAY	2.5	0	2.5	2.5	1.2	2.5	4.1	3.0	3.0	1.1	3.0	0	0	0	3.1	0.2	5.1	5.0	5.1	2.5
FF	2.5	0	2.5	2.5	1.4	1.5	3.7	3.4	3.0	5.1	0	0	0	0	3.1	0.2	5.1	0	5.1	0

REF. NO.	IC2001																			
MODE	41	42	43	44	45	46	47	48	49	50	51	52	53	54	55	56	57	58	59	60
STOP	4.9	2.1	0	4.7	4.2	0	0	5.1	0	0	5.1	0	5.1	0	0	5.1	4.7	0	0	0
PLAY	5.0	0	0	4.7	4.5	5.0	0	5.1	0	5.1	0	5.1	5.1	0	5.1	5.1	4.7	0	0	0
FF	5.0	0	0	4.7	4.6	0	0	5.1	0	0	5.1	0	5.1	0	0	5.1	4.7	0	0	0

REF. NO.	IC2001																			
MODE	61	62	63	64	65	66	67	68	69	70	71	72	73	74	75	76				
STOP	0	0	—	—	5.1	0	0	0.5	5.0	4.9	5.1	2.0	5.1	2.0	0	0				
PLAY	0	0	—	—	5.1	0	0	0.5	5.0	4.9	5.1	2.0	0	5.1	0	4.5				
FF	0	0	—	—	5.1	0	0	0.5	5.0	4.9	5.1	2.0	5.1	2.0	0	0				

REF. NO.	IC2101																			
MODE	1	2	3	4	5	6	7	8	9	10	11	12	13	14	15	16	17	18	19	20
STOP	7.1	0	7.1	1.4	2.0	2.1	2.1	2.1	2.1	2.1	2.1	0	5.1	3.7	2.7	2.6	5.1	0	0.4	0
PLAY	1.4	0	1.4	1.3	2.1	2.1	2.1	2.1	2.1	2.1	0	0	5.1	3.8	2.7	2.5	5.1	0.6	0.4	0.1
FF	3.3	0	3.3	1.3	2.1	2.1	2.1	2.1	2.1	2.1	0	0	5.1	3.8	2.7	2.5	5.1	0.6	0.4	0

REF. NO.	IC2101										IC2301									
MODE	21	22	23	24							1	2	3	4	5	6	7	8	9	
STOP	0	0.6	7.1	13.8							5.1	2.6	2.6	2.6	0	2.6	2.6	2.5	5.1	
PLAY	0	0.6	1.4	10.1							5.1	2.6	2.6	2.6	0	2.6	2.6	2.5	5.1	
FF	0	0.6	3.3	13.8							5.1	2.6	2.6	2.6	0	2.6	2.6	2.5	5.1	

REF. NO.	IC2302										IC6003									
MODE	1	2	3	4	5	6	7	8	9		1	2	3							
STOP	5.1	0.6	2.6	2.5	0	2.5	2.6	0.6	5.1		5.1	5.1	0							
PLAY	5.1	1.7	2.6	2.5	0	2.5	2.6	1.7	5.1		5.1	5.1	0							
FF	5.1	1.5	2.6	2.5	0	2.5	2.6	1.5	5.1		5.1	5.1	0							

SYSTEM CONTROL & SERVO TRANSISTORs DC VOLTAGE CHART

REF. NO.	Q2001			Q2002			Q2003			Q2301			Q2302			Q2303		
MODE	E	C	B	E	C	B	E	C	B	E	C	B	E	C	B	E	C	B
STOP	0.4	2.5	1.0	5.2	5.4	5.8	5.1	4.4	5.1	0.4	2.5	1.0	0.6	0	0.6	0.6	0	0.6
PLAY	0.4	2.5	1.0	5.2	5.4	5.8	5.1	4.7	5.1	0.4	2.5	1.0	1.7	0.9	1.7	1.7	0.9	1.9
FF	0.4	2.5	1.0	5.2	5.4	5.8	5.1	4.4	5.1	0.4	2.5	1.0	1.5	1.0	1.5	1.5	1.0	1.8

REF. NO.	Q6001			Q6002			Q6003			Q6004			Q6006			Q6007		
MODE	E	C	B	E	C	B	E	C	B	E	C	B	E	C	B	E	C	B
STOP	0	16.0	0.1	0.2	16.0	0.2	0	0.2	0	0.8	14.0	0.6	12.2	12.2	11.5	12.2	0	12.2
PLAY	0	15.8	0.2	0.2	15.8	0.2	0	0.2	0	0.8	10.3	0.6	12.2	12.2	11.5	12.2	−0.2	12.2
FF	0	15.9	0.2	0.2	15.9	0.2	0	0.2	0	0.8	14.0	0.6	12.2	12.2	11.5	12.2	0	12.2

REF. NO.	Q6008			Q6010			Q6011		
MODE	E	C	B	E	C	B	E	C	B
STOP	14.0	15.7	14.5	14.5	43.9	15.0	4.8	2.1	4.8
PLAY	10.3	15.6	10.9	10.9	43.9	11.4	4.8	2.1	4.8
FF	14.0	15.6	14.6	14.6	43.9	15.1	4.6	2.1	4.8

REF. NO.	QR2002			QR2004			QR2005			QR2402			QR2403			QR2405		
MODE	E	C	B	E	C	B	E	C	B	E	C	B	E	C	B	E	C	B
STOP	0	0	0	0	0	2.5	0	2.5	0	5.1	0	5.1	5.1	5.1	0	0	4.6	0
PLAY	0	0	5.0	0	0	2.5	0	2.5	0	5.1	0	5.1	5.1	5.1	0	0	4.6	0
FF	0	0.9	0	0	0	2.5	0	2.5	0	5.1	0	5.1	5.1	5.1	0	0	4.6	0

REF. NO.	QR6002			QR6003			QR6004			QR6006			QR6007			QR6011		
MODE	E	C	B	E	C	B	E	C	B	E	C	B	E	C	B	E	C	B
STOP	5.1	0	5.1	5.1	0.6	4.5	0	12.2	0	0	0	4.6	0	15.0	0	0	15.0	0
PLAY	5.1	0	5.1	5.0	0.6	4.6	0	12.2	0	0	0	4.6	0	0.1	5.0	0	0.1	0
FF	5.1	0	5.1	5.0	0.6	4.5	0	12.2	0	0	0	4.6	0	15.1	0	0	15.1	0

REF. NO.	QR6012			QR6201			QR6202		
MODE	E	C	B	E	C	B	E	C	B
STOP	0	15.0	0	5.1	0	5.1	0	5.1	0
PLAY	0	0.1	0	5.1	0	5.1	0	5.1	0
FF	0	15.1	0	5.1	0	5.1	0	5.1	0

3-8. LUMINANCE & CHROMINANCE SCHEMATIC DIAGRAM

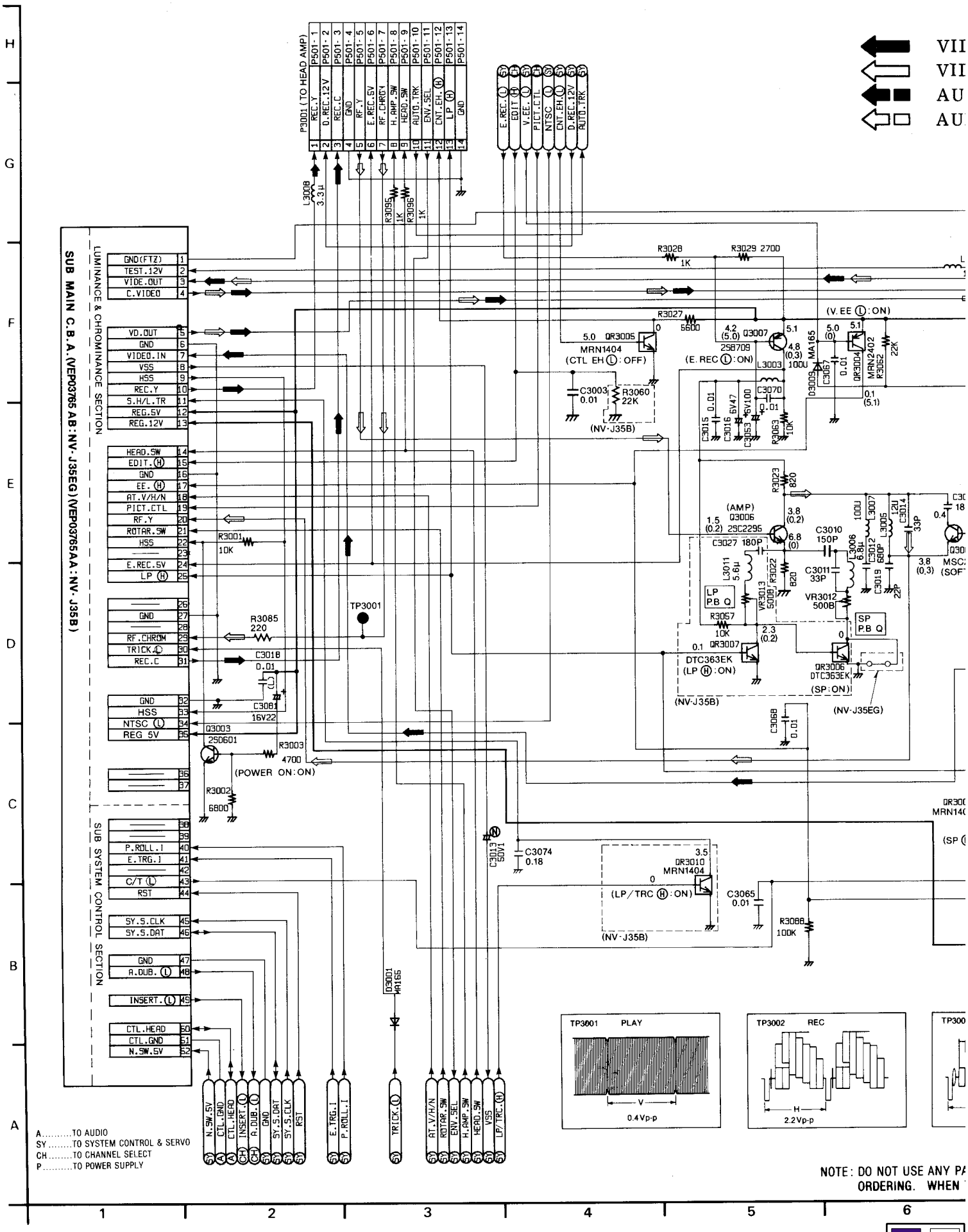

VIDEO MAIN SIGNAL PATH IN REC MODE
VIDEO MAIN SIGNAL PATH IN PLAYBACK MODE
AUDIO MAIN SIGNAL PATH IN REC MODE
AUDIO MAIN SIGNAL PATH IN PLAYBACK MODE

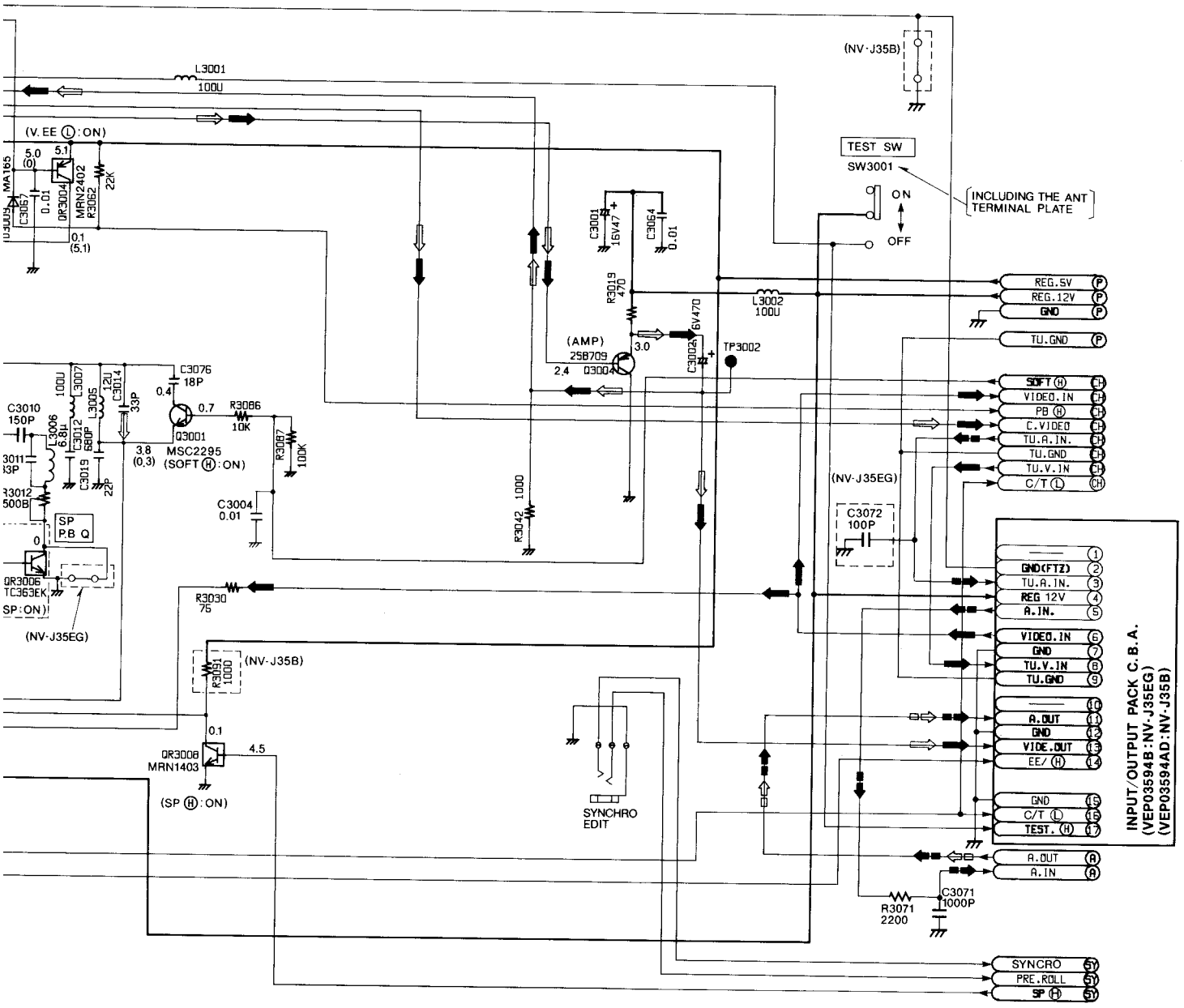

NOTE: DO NOT USE ANY PART NUMBER SHOWN ON THIS SCHEMATIC DIAGRAM FOR ORDERING. WHEN YOU ORDER A PART, PLEASE REFER TO PARTS LIST.

NOTE: THE MEASUREMENT MODE OF THE DC VOLTAGE IN THE BRACKETS ( ) ON THIS DIAGRAM IS RECORD MODE WITH PAL COLOUR SIGNAL. (SP MODE)
THE MEASUREMENT MODE OF THE DC VOLTAGE OUT OF THE BRACKETS ON THIS DIAGRAM IS PLAYBACK MODE WITH PAL COLOUR SIGNAL. (SP MODE)

3-10. SUB MAIN (SUB SYSTEM CONTROL) SCHEMATIC DIAGRAM

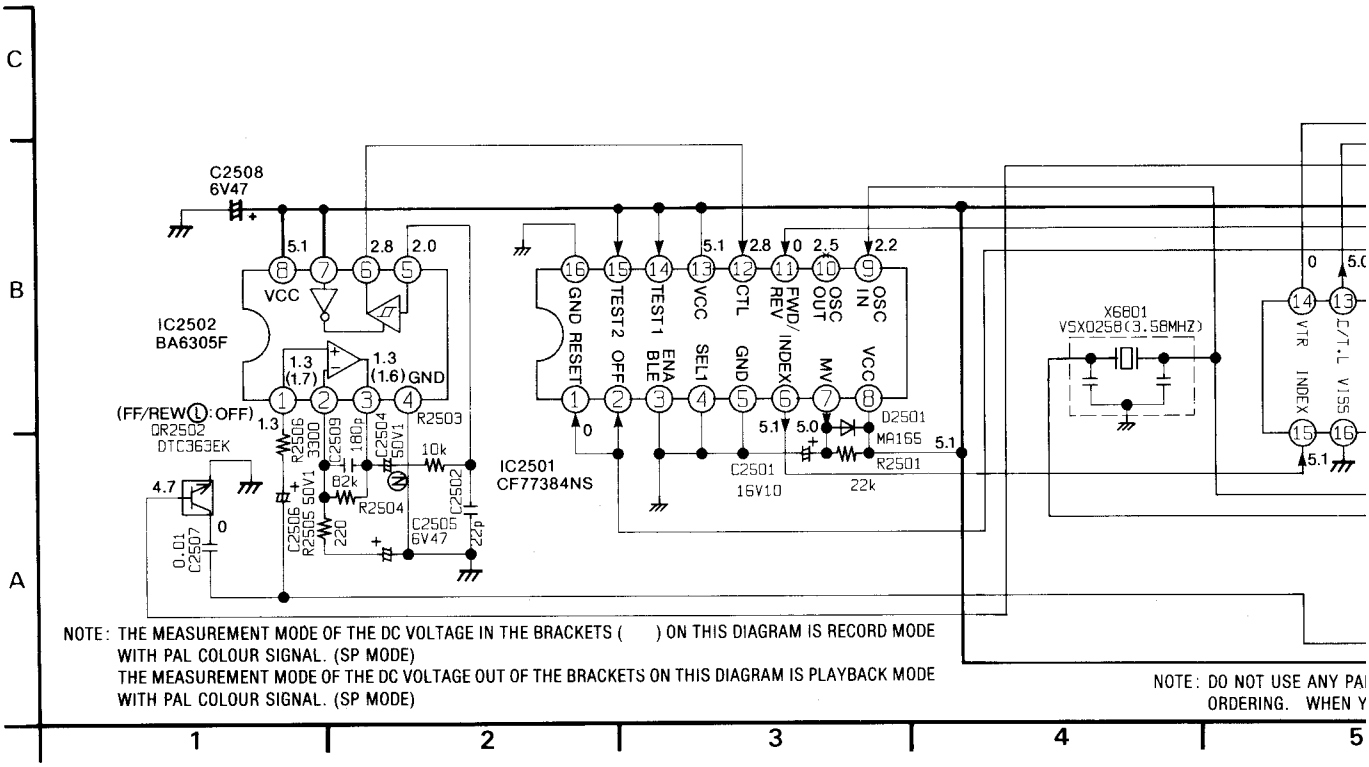

SCHEMATIC DIAGRAM

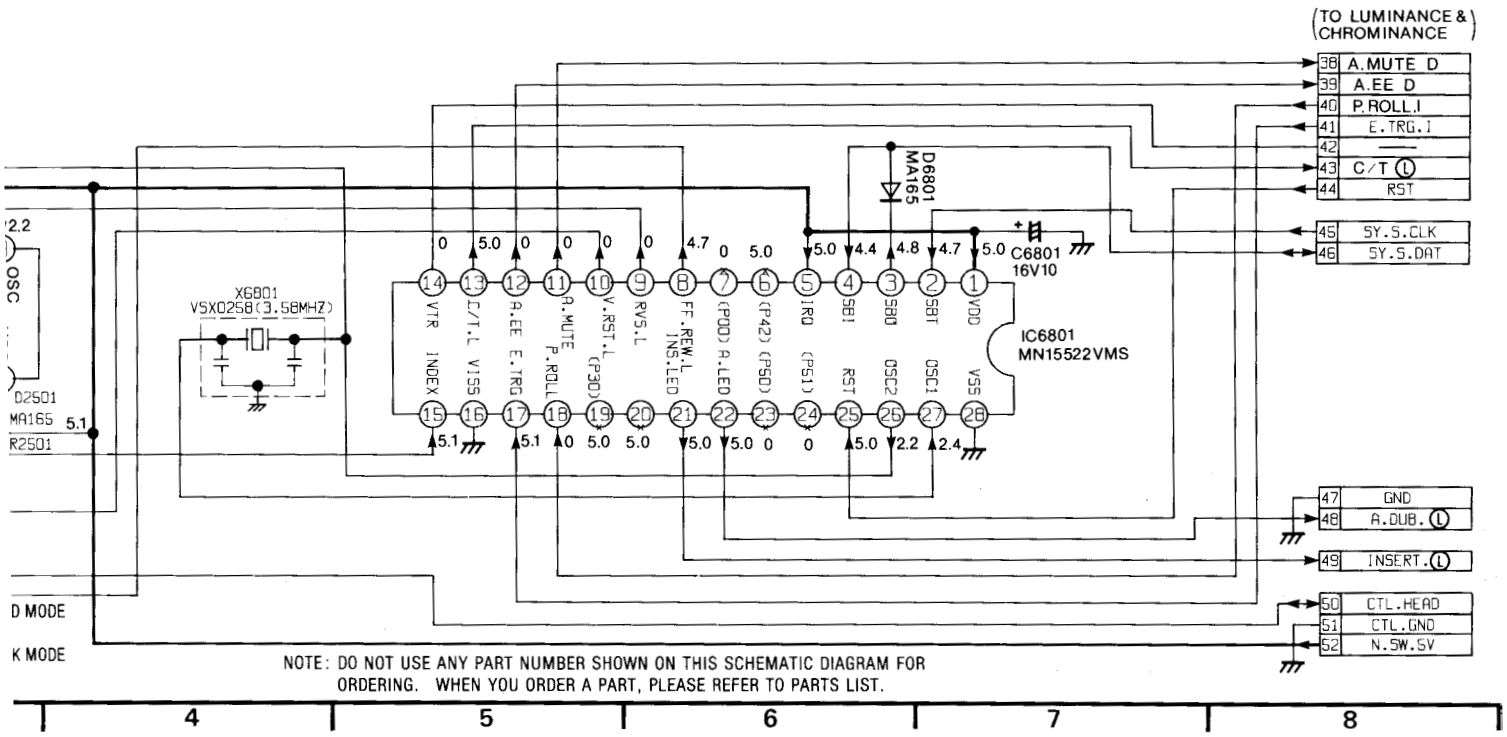

NOTE: DO NOT USE ANY PART NUMBER SHOWN ON THIS SCHEMATIC DIAGRAM FOR ORDERING. WHEN YOU ORDER A PART, PLEASE REFER TO PARTS LIST.

IC301 (VEFH03D)

PIN NO.	WAVEFORM	PIN NO.	WAVEFORM
1	V 2.0Vp-p (REC/P.B)	16	H 0.7Vp-p (REC) 0.6Vp-p (P.B)
2	H 4.8Vp-p (REC/P.B)	17	H 0.9Vp-p (REC/P.B)
3	H 1.0Vp-p (REC/P.B)	22	1.4Vp-p (REC)
5	H 0.9Vp-p (REC)	23	V 1.0Vp-p (P.B)
5	H 1.0Vp-p (P.B)	26	V 0.9Vp-p (P.B)
7, 8	H 0.46Vp-p (REC) 0.5Vp-p (P.B)	28	H 0.4Vp-p (P.B)
9	H 0.66Vp-p (REC)	30	H 1.2Vp-p (P.B)
10	H 0.6Vp-p(REC)	33	V 0.26Vp-p (P.B)
11	H 0.3Vp-p (REC/P.B)	35	H 0.4Vp-p (P.B)
12	H 0.07Vp-p(REC)	37, 38	H 0.9Vp-p (REC/P.B)
13	H 0.9Vp-p (REC/P.B)	40	H 2.3Vp-p (REC/P.B)
15	H 0.9Vp-p (REC/P.B)	41	V 0.5Vp-p (REC) 0.56Vp-p (P.B)

IC801 (VEFH04F)

PIN NO.	WAVEFORM	PIN NO.	WAVEFORM
2	H 0.12Vp-p (REC/P.B)	15	H 0.48Vp-p (REC)
3	H 1.0Vp-p (REC/P.B)	17	H 0.48Vp-p (REC) 0.18Vp-p (P.B)
5	H 0.19Vp-p (REC/P.B)	19	H 0.28Vp-p (REC) 0.25Vp-p (P.B)
6	V 5.0Vp-p (REC/P.B)	28	0.8Vp-p (REC/P.B)
7	H 0.6Vp-p (REC) 0.5Vp-p (P.B)	29	1.1Vp-p (REC/P.B)
9	H 0.36Vp-p (REC)	31	0.8Vp-p (REC/P.B)
10	H 1.1Vp-p (REC)	32	H 4.8Vp-p (REC/P.B)
10	H 1.2Vp-p (P.B)	33	H 1.0Vp-p (REC) 0.8Vp-p (P.B)
11	H 0.4Vp-p (REC) 0.12Vp-p (P.B)	34	H 5.0Vp-p (REC/P.B)
12	H 1.0Vp-p (REC/P.B)	35	H 5.0Vp-p (REC/P.B)
13	V 0.18Vp-p (P.B)	37	H 0.3Vp-p (P.B)
14	H 0.32Vp-p (REC) 0.1Vp-p (P.B)	38	H 1.0Vp-p (P.B)

3-11. SUB MAIN (LUMINANCE & CHROMINANCE) SCHEMATIC DIAGRAM

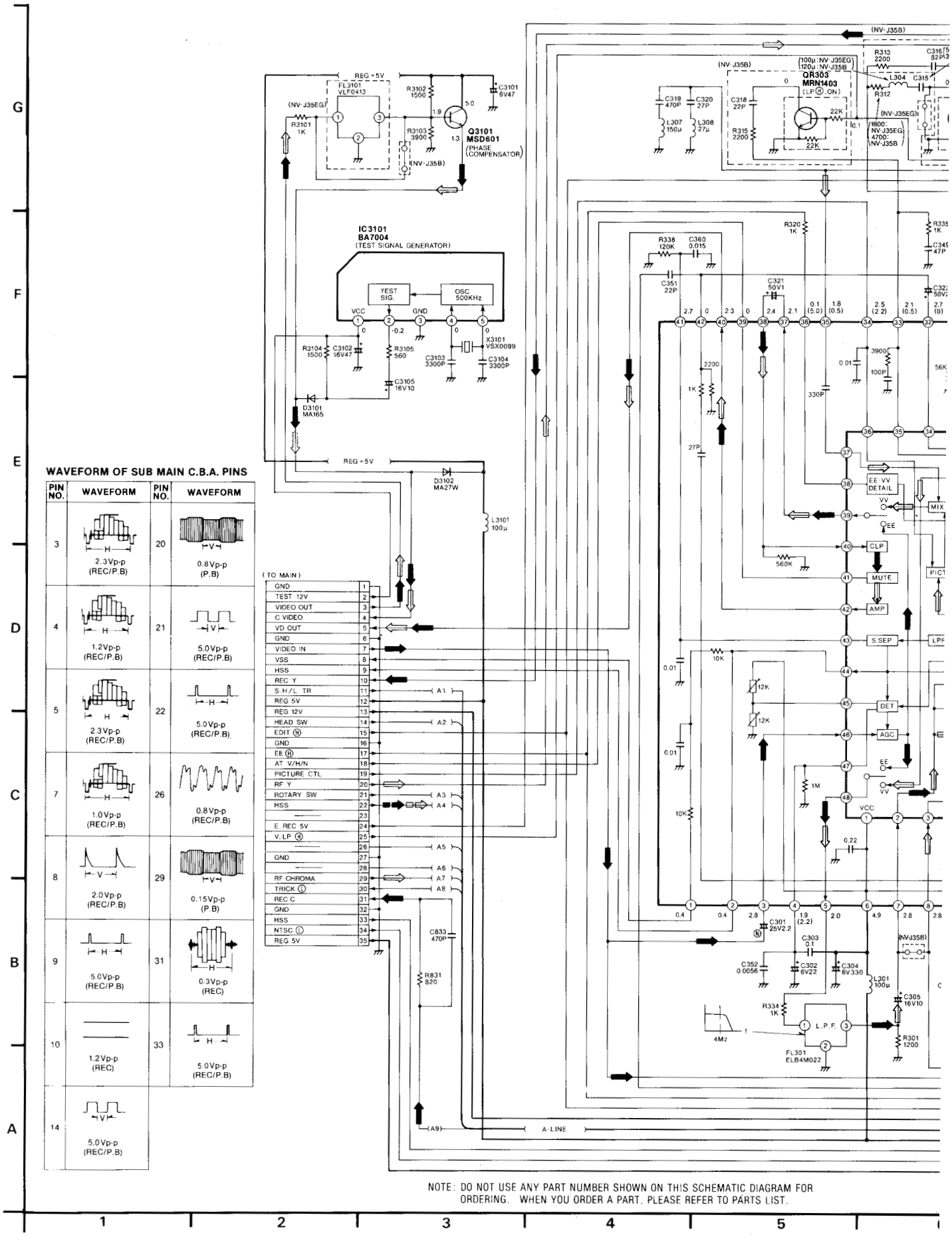

WAVEFORM OF SUB MAIN C.B.A. PINS

PIN NO.	WAVEFORM	PIN NO.	WAVEFORM
3	2.3Vp-p (REC/P.B)	20	0.8Vp-p (P.B)
4	1.2Vp-p (REC/P.B)	21	5.0Vp-p (REC/P.B)
5	2.3Vp-p (REC/P.B)	22	5.0Vp-p (REC/P.B)
7	1.0Vp-p (REC/P.B)	26	0.8Vp-p (REC/P.B)
8	2.0Vp-p (REC/P.B)	29	0.15Vp-p (P.B)
9	5.0Vp-p (REC/P.B)	31	0.3Vp-p (REC)
10	1.2Vp-p (REC)	33	5.0Vp-p (REC/P.B)
14	5.0Vp-p (REC/P.B)		

NOTE: DO NOT USE ANY PART NUMBER SHOWN ON THIS SCHEMATIC DIAGRAM FOR ORDERING. WHEN YOU ORDER A PART, PLEASE REFER TO PARTS LIST.

AM

MAIN SIGNAL PATH IN REC MODE

MAIN SIGNAL PATH IN

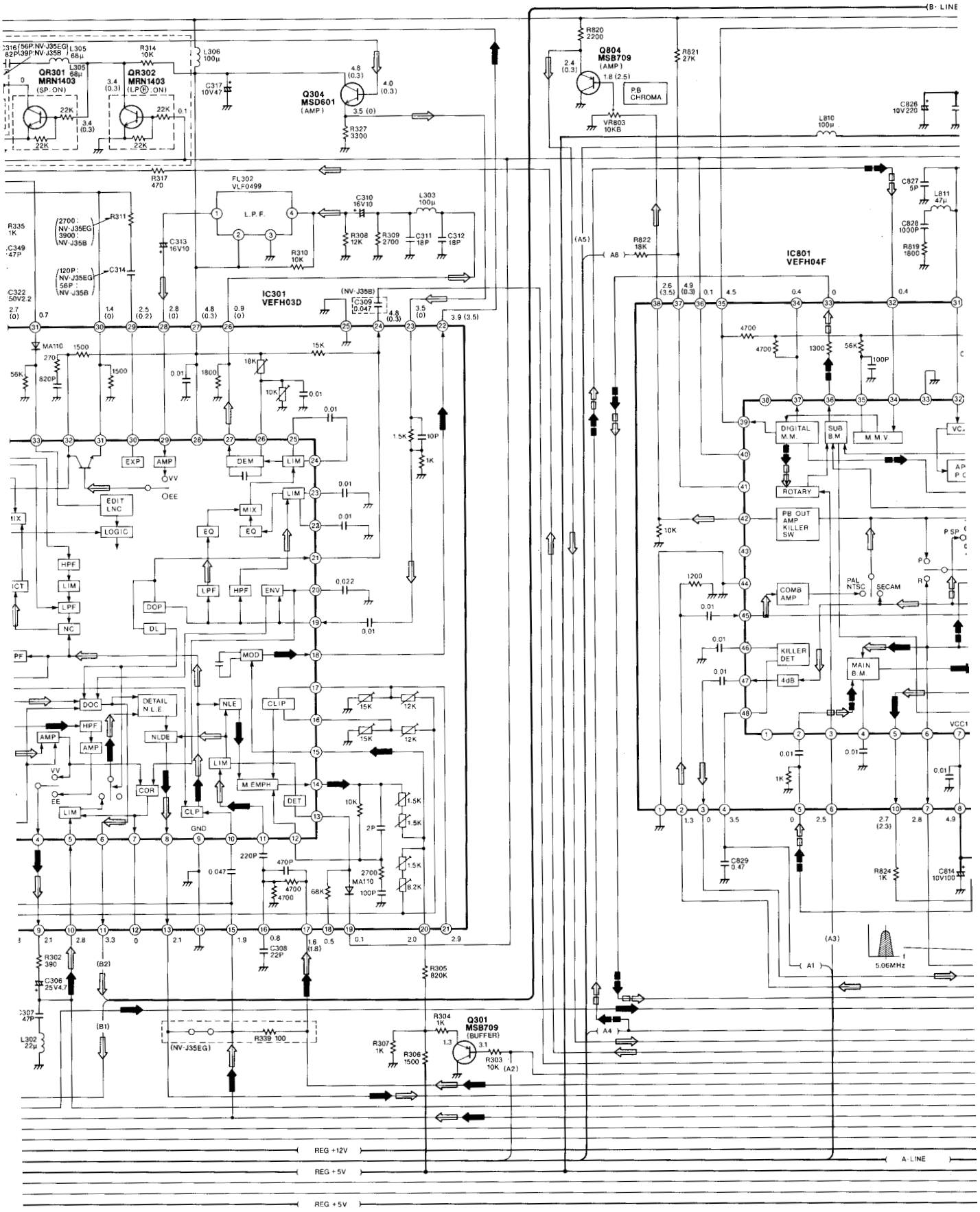

5 | 7 | 8 | 9 | 10 | 11

PATH IN PLAYBACK MODE ◀■ 5.06MHz PHASE ROTATIONAL SIGNAL IN REC MODE

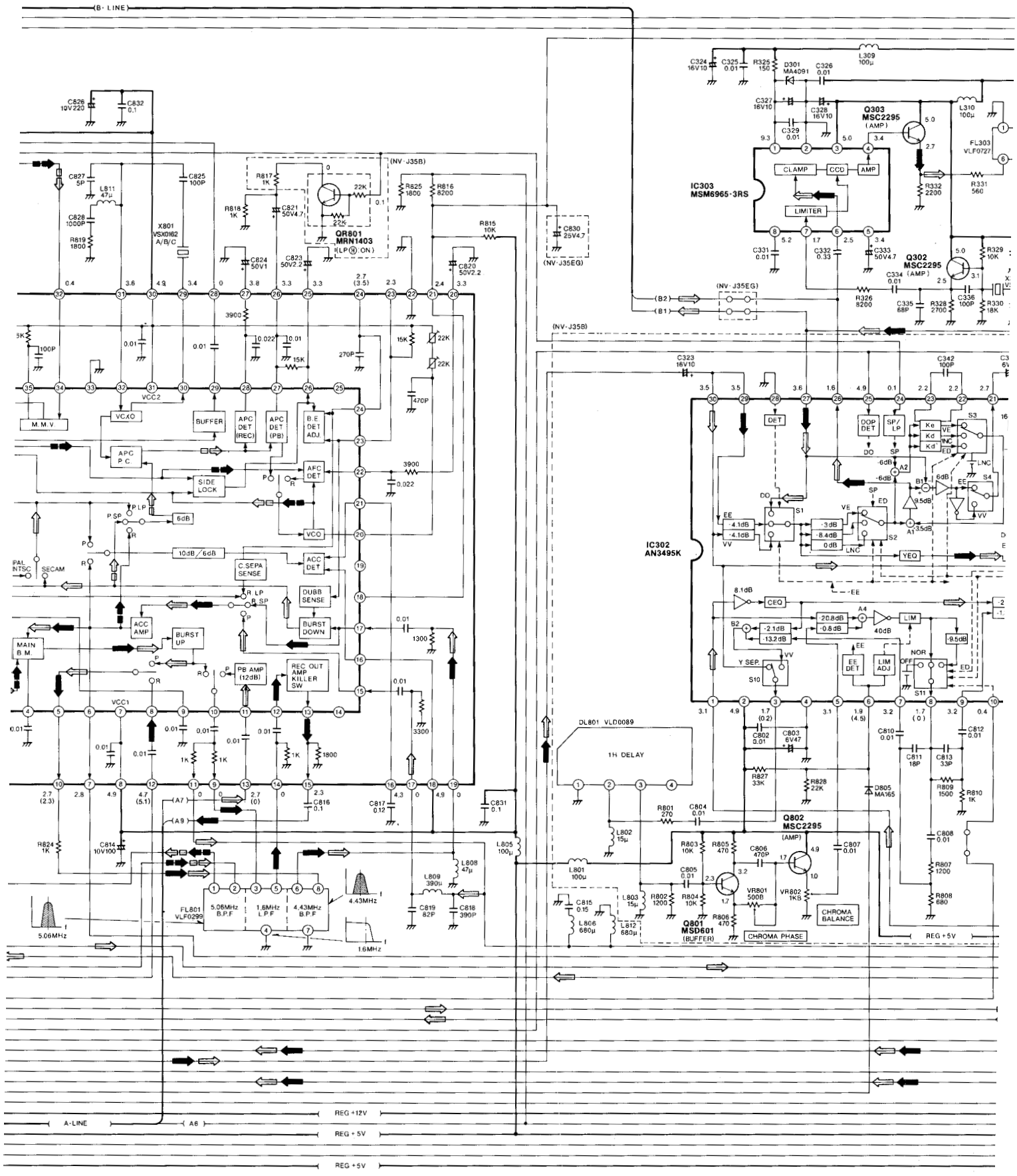

MODE ⇦□ 5.06MHz PHASE ROTATIONAL SIGNAL IN PLAYBACK MODE

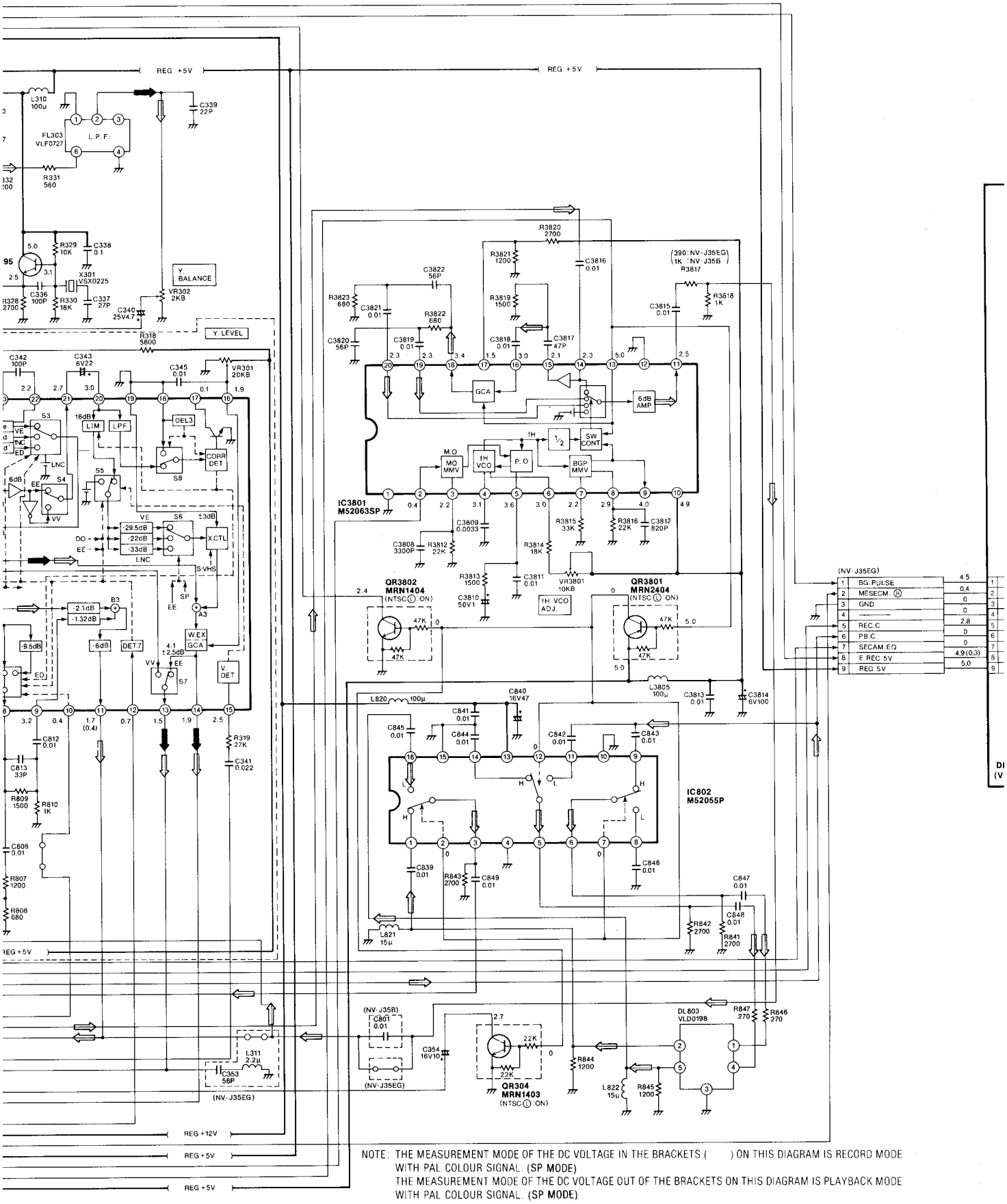

NOTE: THE MEASUREMENT MODE OF THE DC VOLTAGE IN THE BRACKETS ( ) ON THIS DIAGRAM IS RECORD MODE WITH PAL COLOUR SIGNAL. (SP MODE)
THE MEASUREMENT MODE OF THE DC VOLTAGE OUT OF THE BRACKETS ON THIS DIAGRAM IS PLAYBACK MODE WITH PAL COLOUR SIGNAL. (SP MODE)

17 18 19 20 21 22

YBACK MODE

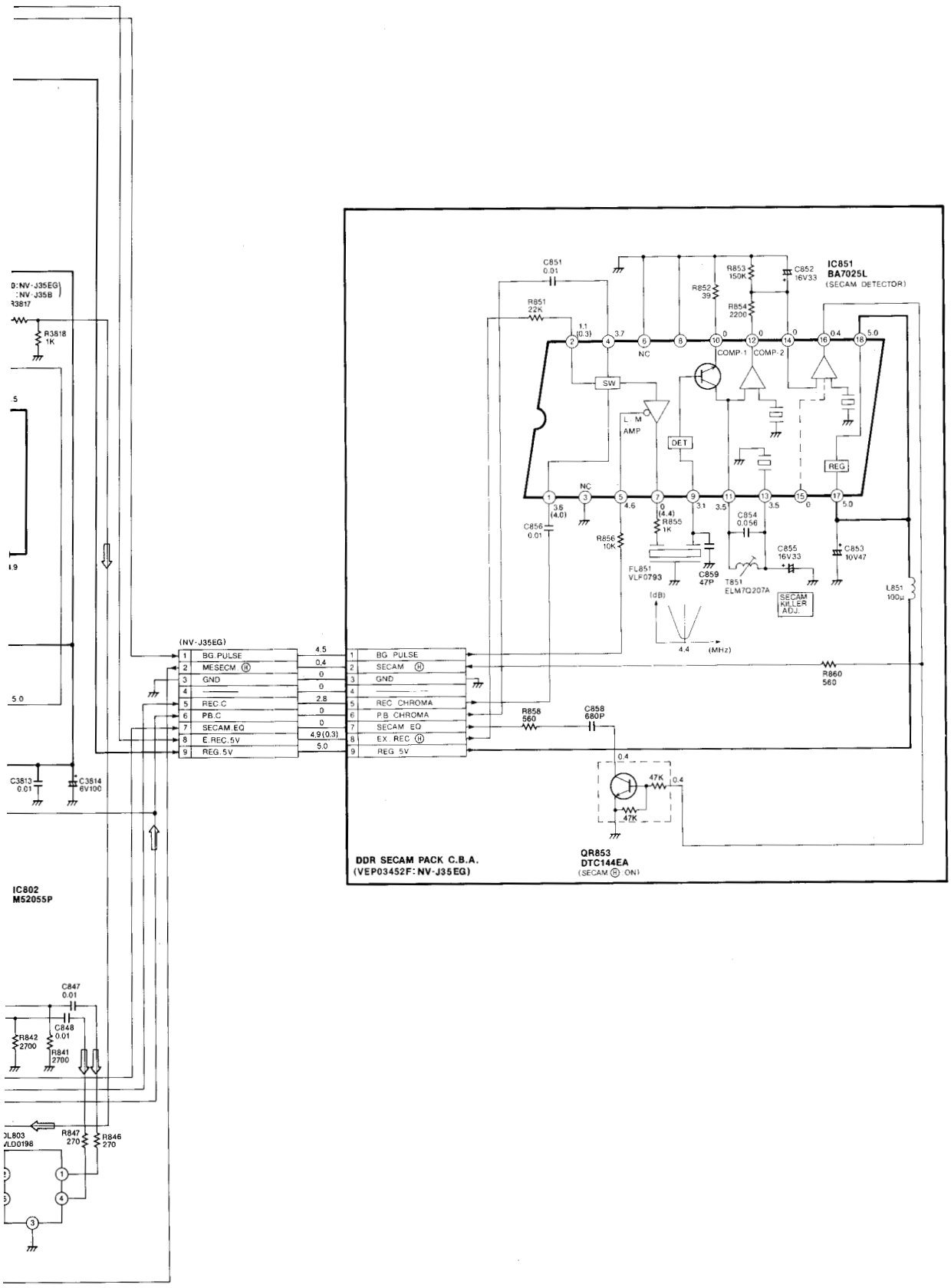

KETS ( ) ON THIS DIAGRAM IS RECORD MODE

RACKETS ON THIS DIAGRAM IS PLAYBACK MODE

21 22 23 24 25

3-12. INPUT/OUTPUT PACK SCHEMATIC DIAGRAM

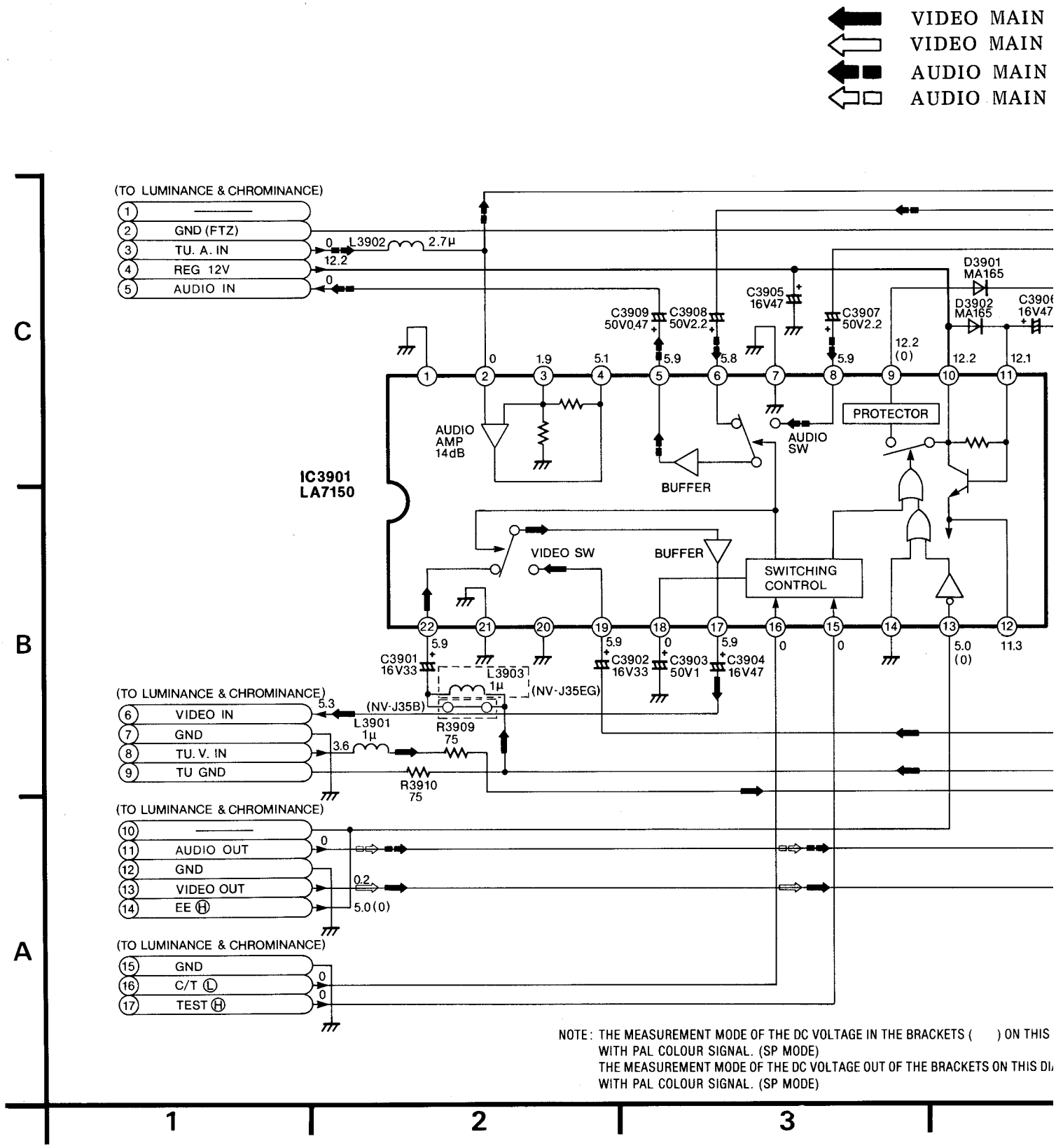

VIDEO MAIN SIGNAL PATH IN REC MODE
VIDEO MAIN SIGNAL PATH IN PLAYBACK MODE
AUDIO MAIN SIGNAL PATH IN REC MODE
AUDIO MAIN SIGNAL PATH IN PLAYBACK MODE

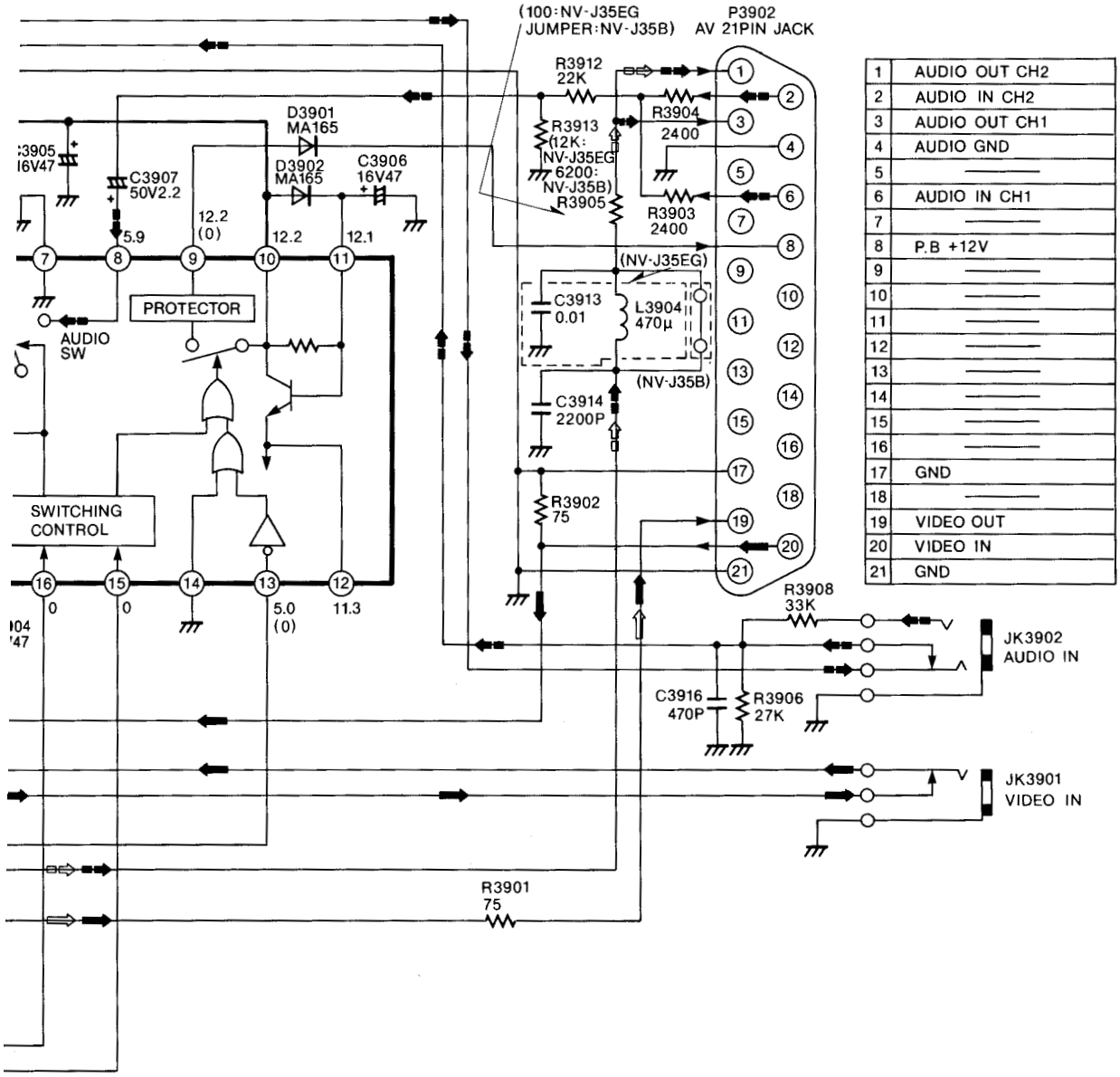

1	AUDIO OUT CH2
2	AUDIO IN CH2
3	AUDIO OUT CH1
4	AUDIO GND
5	———
6	AUDIO IN CH1
7	———
8	P.B +12V
9	———
10	———
11	———
12	———
13	———
14	———
15	———
16	———
17	GND
18	———
19	VIDEO OUT
20	VIDEO IN
21	GND

E OF THE DC VOLTAGE IN THE BRACKETS ( ) ON THIS DIAGRAM IS RECORD MODE
L. (SP MODE)
E OF THE DC VOLTAGE OUT OF THE BRACKETS ON THIS DIAGRAM IS PLAYBACK MODE
L. (SP MODE)

NOTE: DO NOT USE ANY PART NUMBER SHOWN ON THIS SCHEMATIC DIAGRAM FOR ORDERING. WHEN YOU ORDER A PART, PLEASE REFER TO PARTS LIST.

3-15. HEAD AMP SCHEMATIC DIAGRAM

MAIN SI

MAIN SI

P501
(TO LUMINANCE & CHROMINANCE)

P3001-14	GND	14
P3001-13	LP (H)	13
P3001-12	CNT.EH. (H)	12
P3001-11	ENV.SEL	11
P3001-10	AUTO.TRK	10
P3001- 9	HEAD.SW	9
P3001- 8	H.AMP.SW	8
P3001- 7	RF.CHROM	7
P3001- 6	E.REC.5V	6
P3001- 5	RF.Y	5
P3001- 4	GND	4
P3001- 3	REC.C	3
P3001- 2	D.REC.12V	2
P3001- 1	REC.Y	1

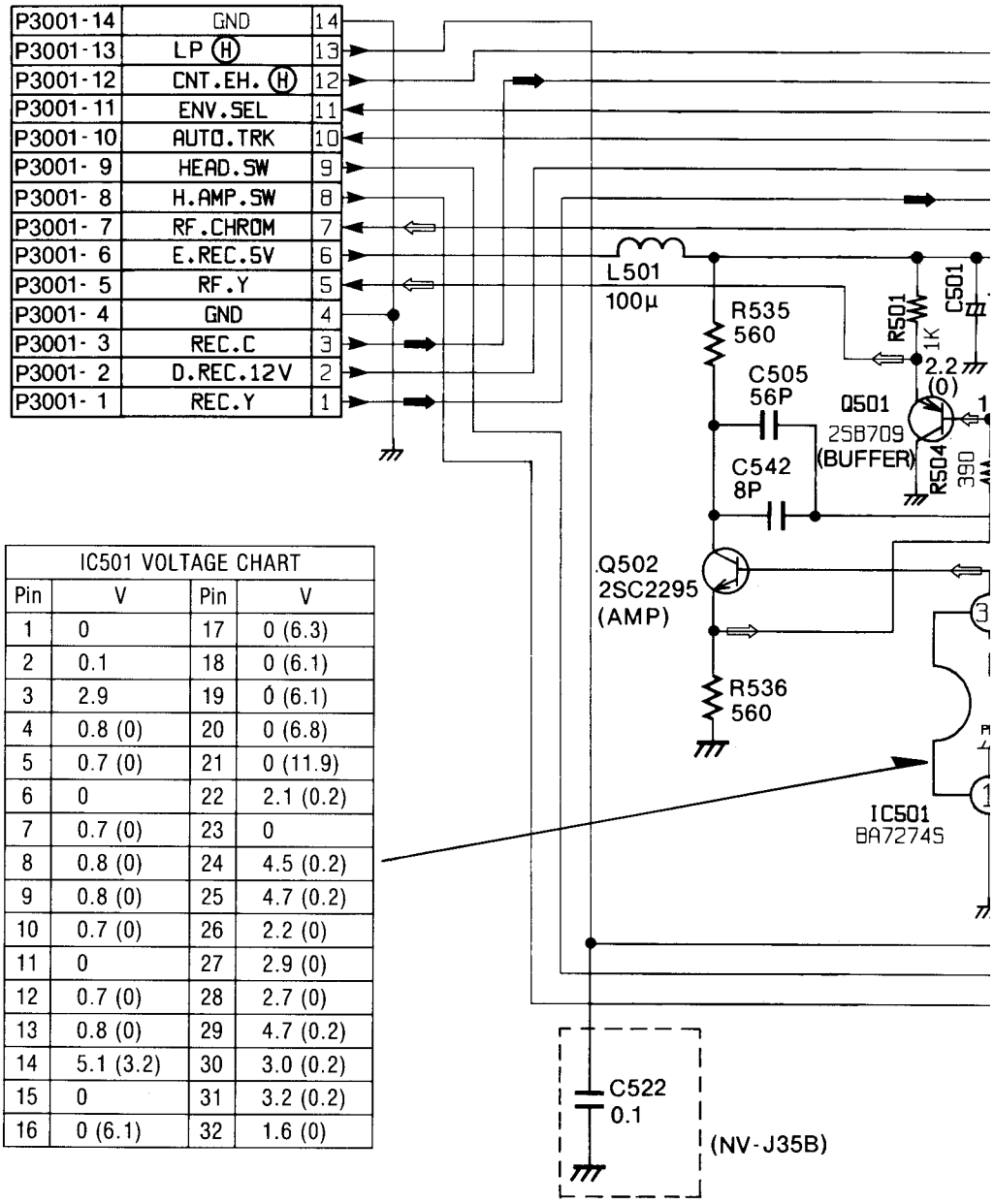

IC501 VOLTAGE CHART

Pin	V	Pin	V
1	0	17	0 (6.3)
2	0.1	18	0 (6.1)
3	2.9	19	0 (6.1)
4	0.8 (0)	20	0 (6.8)
5	0.7 (0)	21	0 (11.9)
6	0	22	2.1 (0.2)
7	0.7 (0)	23	0
8	0.8 (0)	24	4.5 (0.2)
9	0.8 (0)	25	4.7 (0.2)
10	0.7 (0)	26	2.2 (0)
11	0	27	2.9 (0)
12	0.7 (0)	28	2.7 (0)
13	0.8 (0)	29	4.7 (0.2)
14	5.1 (3.2)	30	3.0 (0.2)
15	0	31	3.2 (0.2)
16	0 (6.1)	32	1.6 (0)

NOTE: THE MEASUREMENT MODE OF THE DC VOLTAGE IN THE BRACKETS ( ) ON THIS DI
WITH PAL COLOUR SIGNAL. (SP MODE)
THE MEASUREMENT MODE OF THE DC VOLTAGE OUT OF THE BRACKETS ON THIS DIAG
WITH PAL COLOUR SIGNAL. (SP MODE)

EMATIC DIAGRAM

MAIN SIGNAL PATH IN REC MODE

MAIN SIGNAL PATH IN PLAYBACK MODE

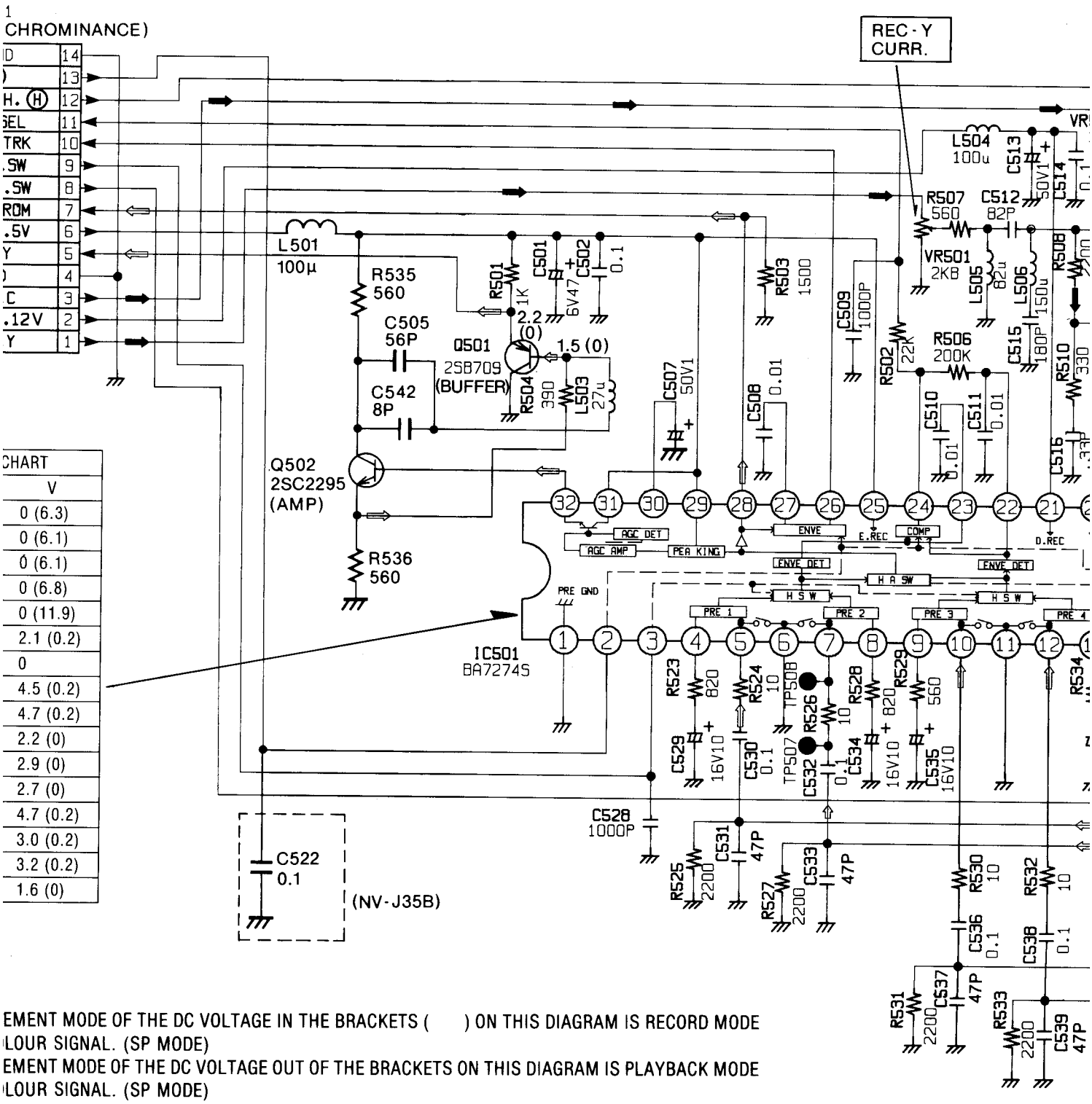

CHART
V
0 (6.3)
0 (6.1)
0 (6.1)
0 (6.8)
0 (11.9)
2.1 (0.2)
0
4.5 (0.2)
4.7 (0.2)
2.2 (0)
2.9 (0)
2.7 (0)
4.7 (0.2)
3.0 (0.2)
3.2 (0.2)
1.6 (0)

EMENT MODE OF THE DC VOLTAGE IN THE BRACKETS ( ) ON THIS DIAGRAM IS RECORD MODE
LOUR SIGNAL. (SP MODE)
EMENT MODE OF THE DC VOLTAGE OUT OF THE BRACKETS ON THIS DIAGRAM IS PLAYBACK MODE
LOUR SIGNAL. (SP MODE)

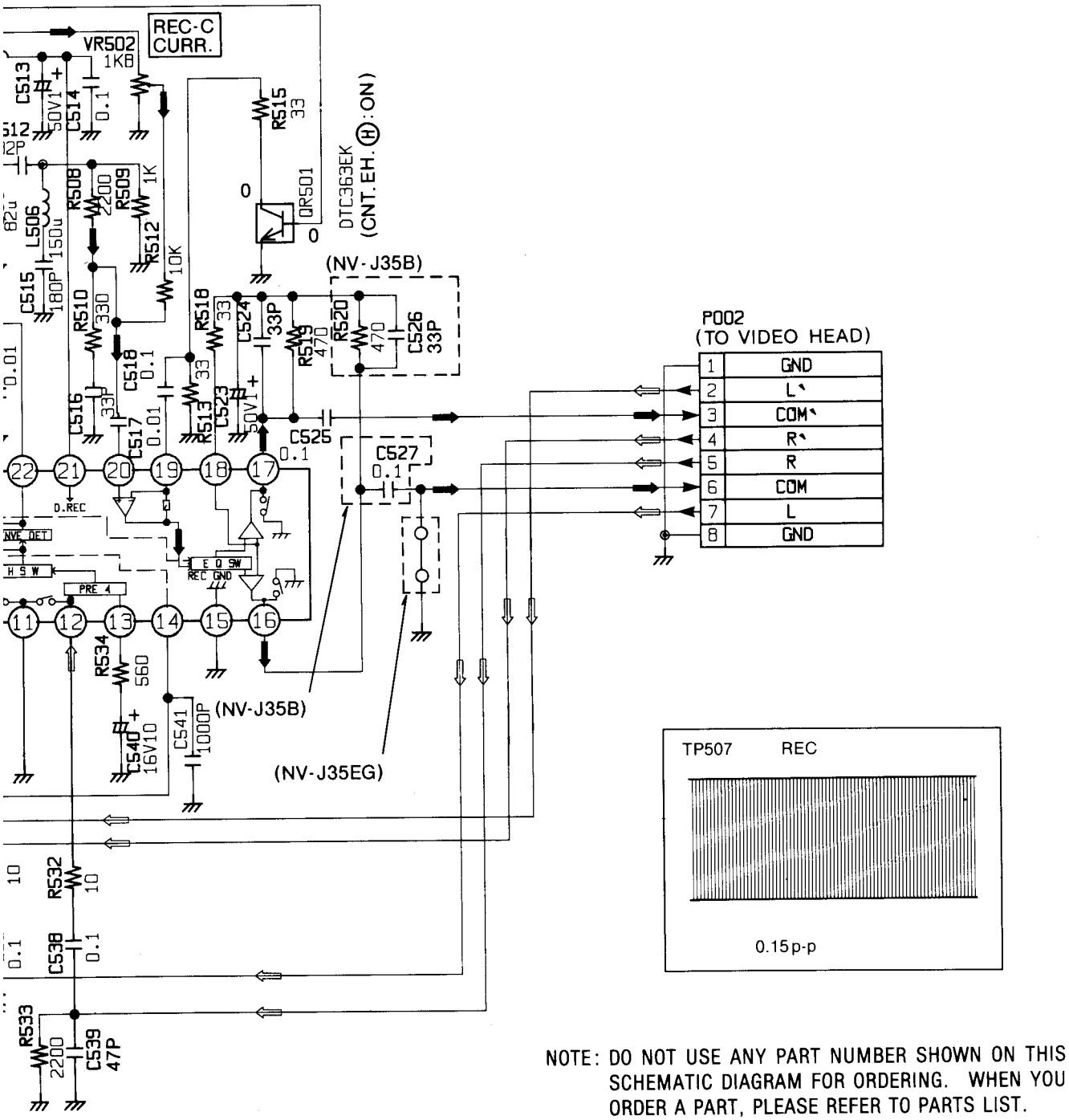

NOTE: DO NOT USE ANY PART NUMBER SHOWN ON THIS SCHEMATIC DIAGRAM FOR ORDERING. WHEN YOU ORDER A PART, PLEASE REFER TO PARTS LIST.

5 6 7

3-16. AUDIO SCHEMATIC DIAGRAM

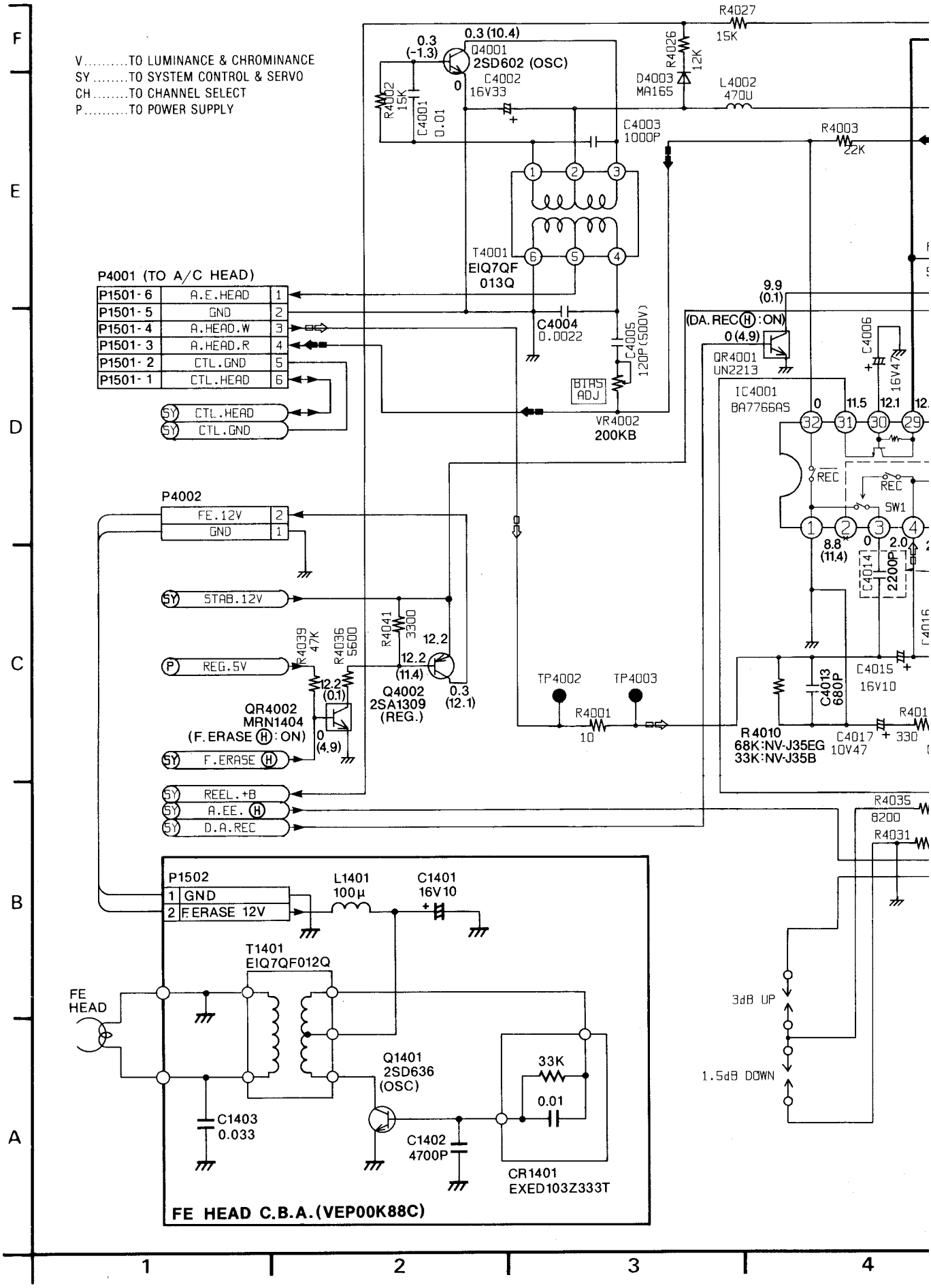

MAIN SIGNAL PATH IN REC MODE

MAIN SIGNAL PATH IN P

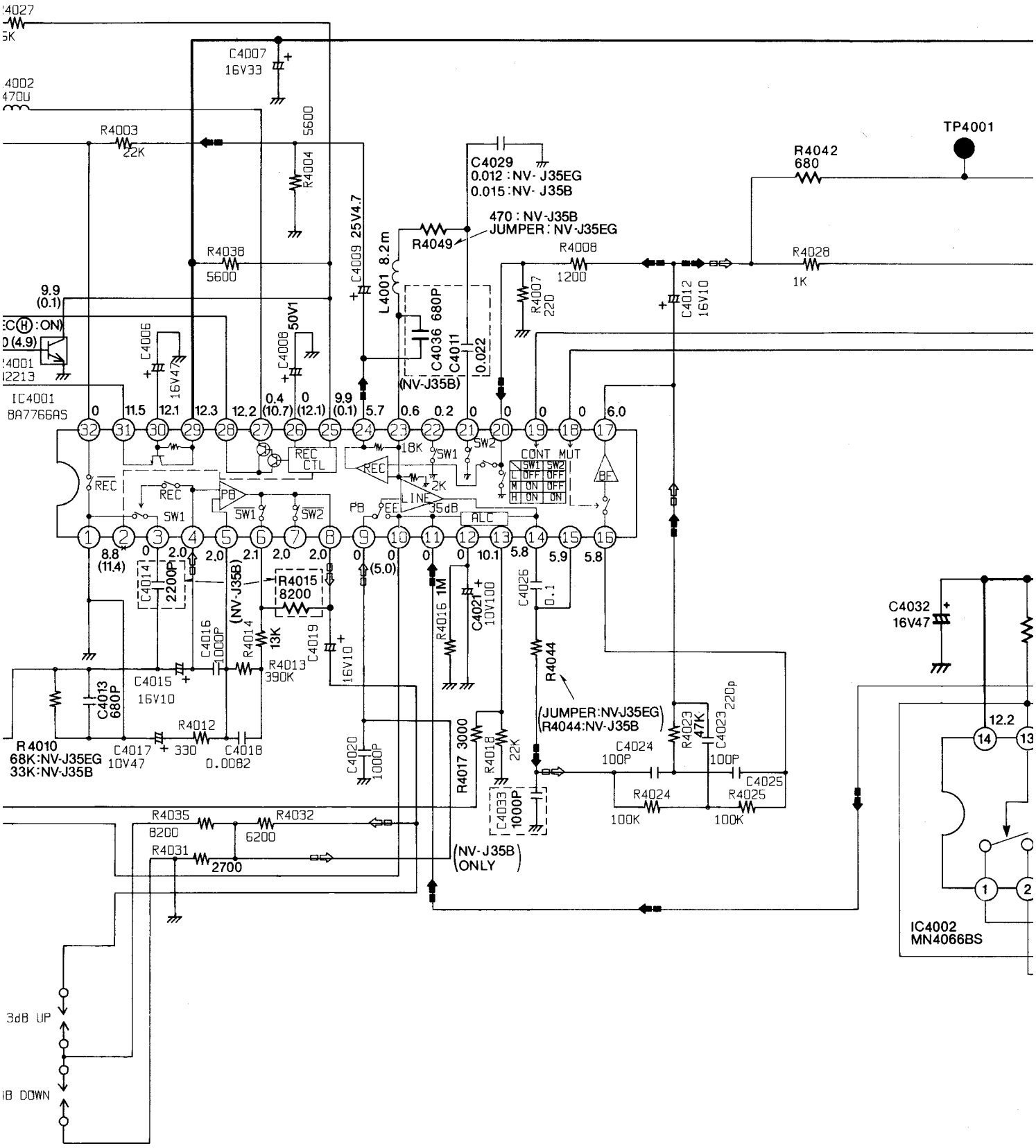

NOTE: THE MEASUREMENT MODE OF THE DC VOLTAGE IN THE BRA
WITH PAL COLOUR SIGNAL. (SP MODE)
THE MEASUREMENT MODE OF THE DC VOLTAGE OUT OF THE
WITH PAL COLOUR SIGNAL. (SP MODE)

• LINE IN SIGNAL LEVEL... 10dB 1kHz

4 5 6 7

NAL PATH IN PLAYBACK MODE

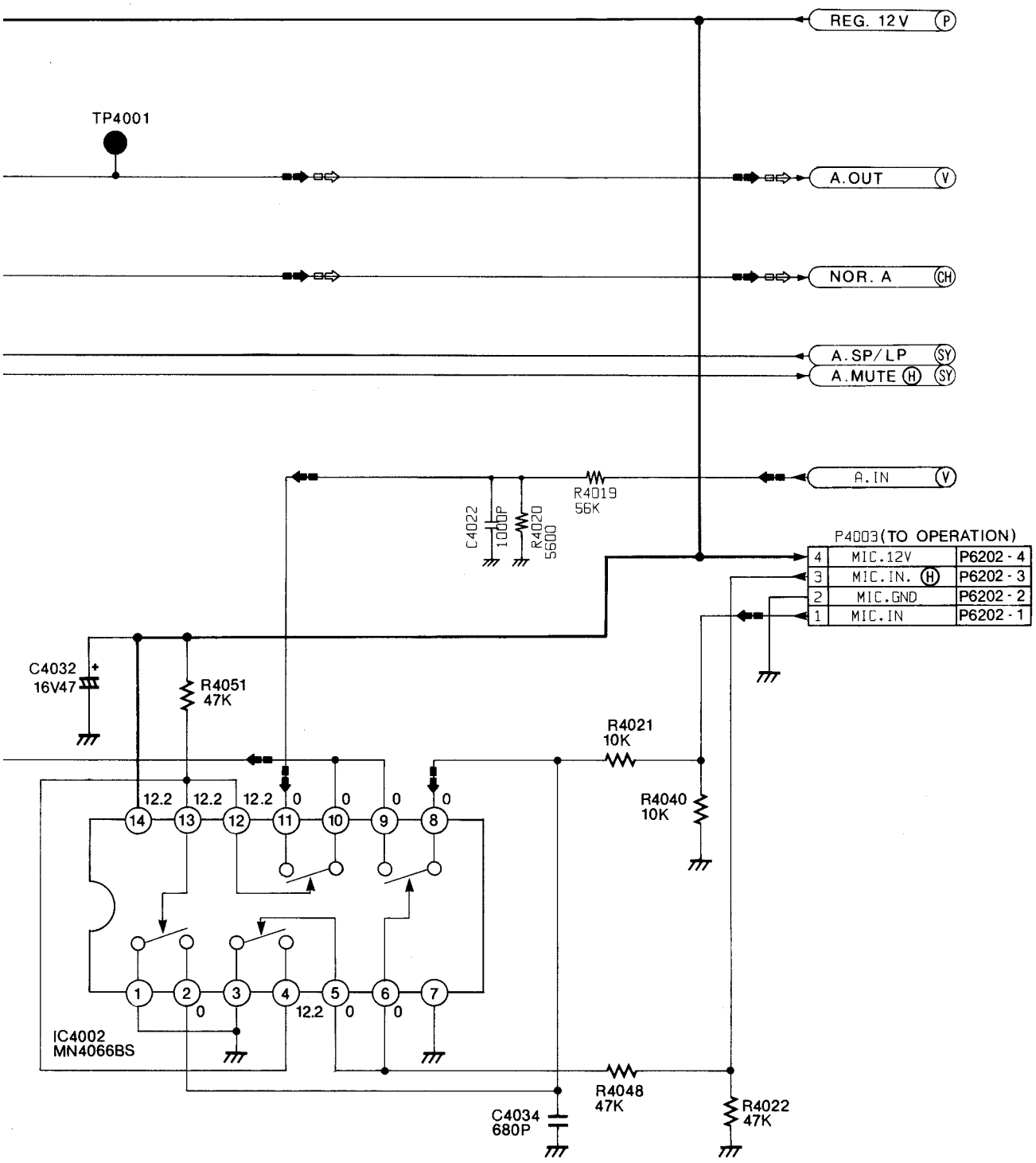

IE DC VOLTAGE IN THE BRACKETS ( ) ON THIS DIAGRAM IS RECORD MODE
MODE)
IE DC VOLTAGE OUT OF THE BRACKETS ON THIS DIAGRAM IS PLAYBACK MODE
MODE)

.. 10dB 1kHz

NOTE: DO NOT USE ANY PART NUMBER SHOWN ON THIS SCHEMATIC DIAGRAM FOR ORDERING. WHEN YOU ORDER A PART, PLEASE REFER TO PARTS LIST.

7 | 8 | 9 | 10 | 11

3-17. CHANNEL SELECT SCHEMATIC DIAGRAM

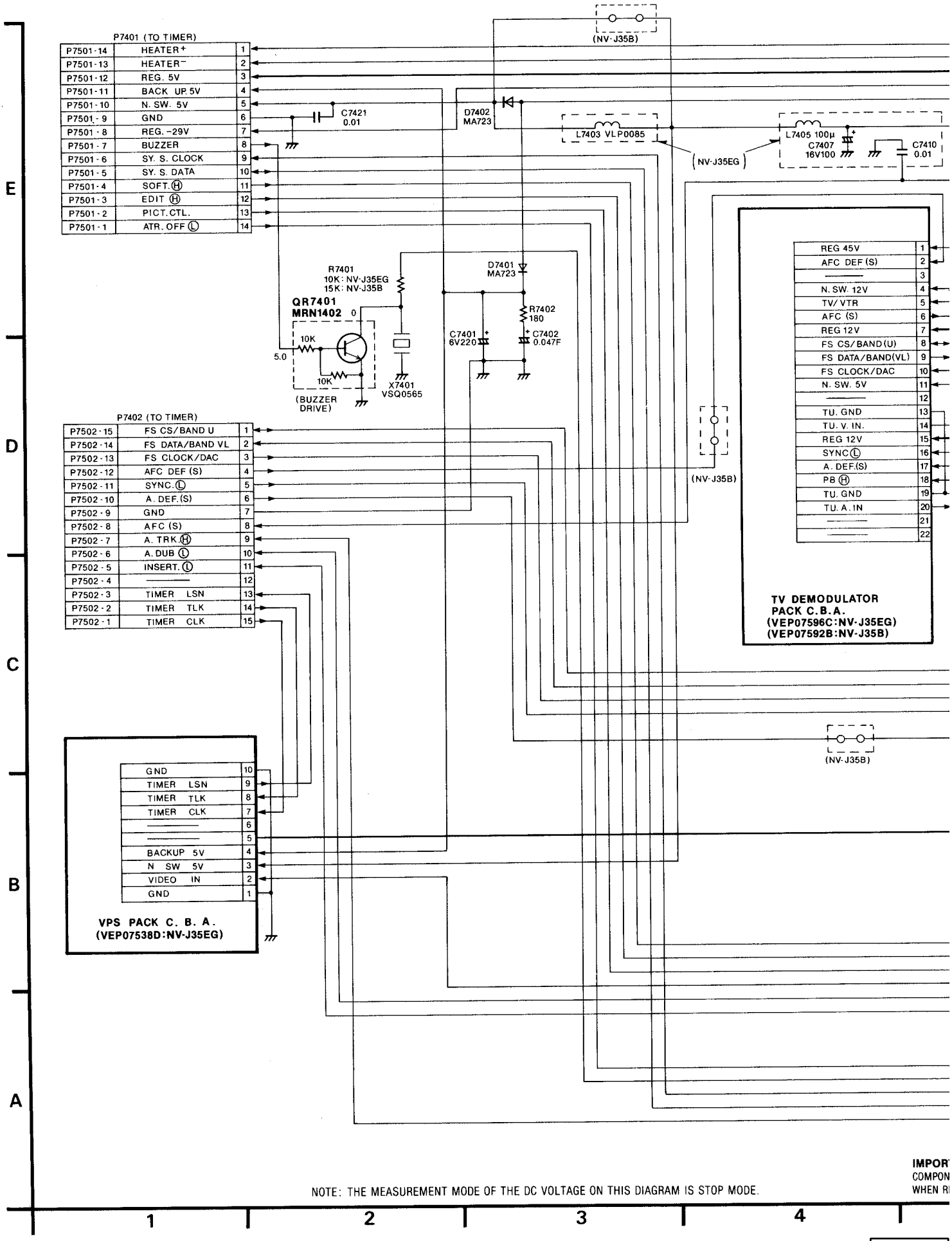

NOTE: THE MEASUREMENT MODE OF THE DC VOLTAGE ON THIS DIAGRAM IS STOP MODE.

IMPOR
COMPON
WHEN R

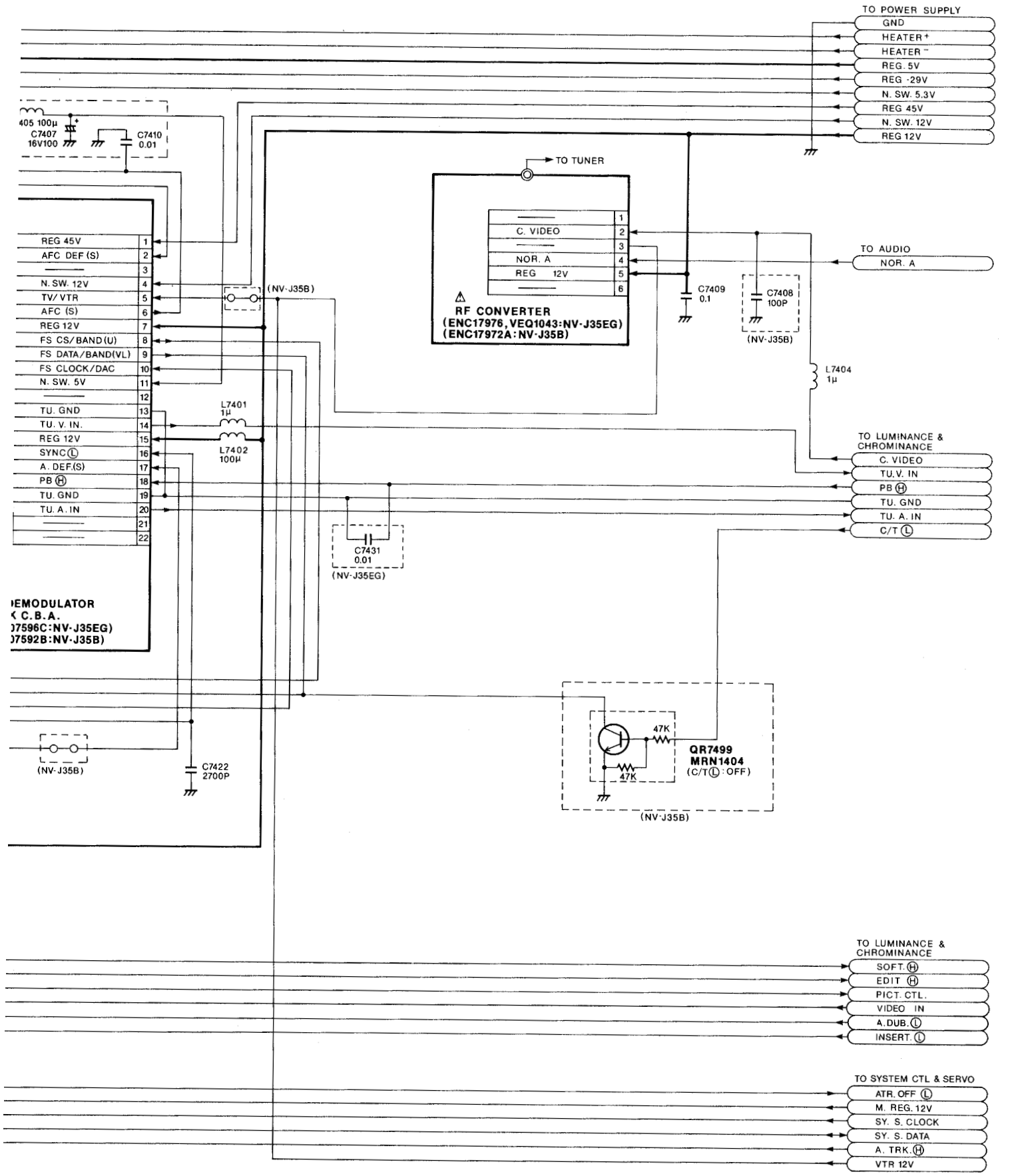

IMPORTANT SAFETY NOTICE:
COMPONENTS IDENTIFIED WITH THE MARK ⚠ HAVE THE SPECIAL CHARACTERISTICS FOR SAFETY. WHEN REPLACING ANY OF THESE COMPONENTS, USE ONLY THE SAME TYPE.

NOTE: DO NOT USE ANY PART NUMBER SHOWN ON THIS SCHEMATIC DIAGRAM FOR ORDERING. WHEN YOU ORDER A PART, PLEASE REFER TO PARTS LIST.

4 | 5 | 6 | 7 | 8

3-18. TV DEMODULATOR PACK SCHEMATIC DIAGRAM (NV-J35EG)

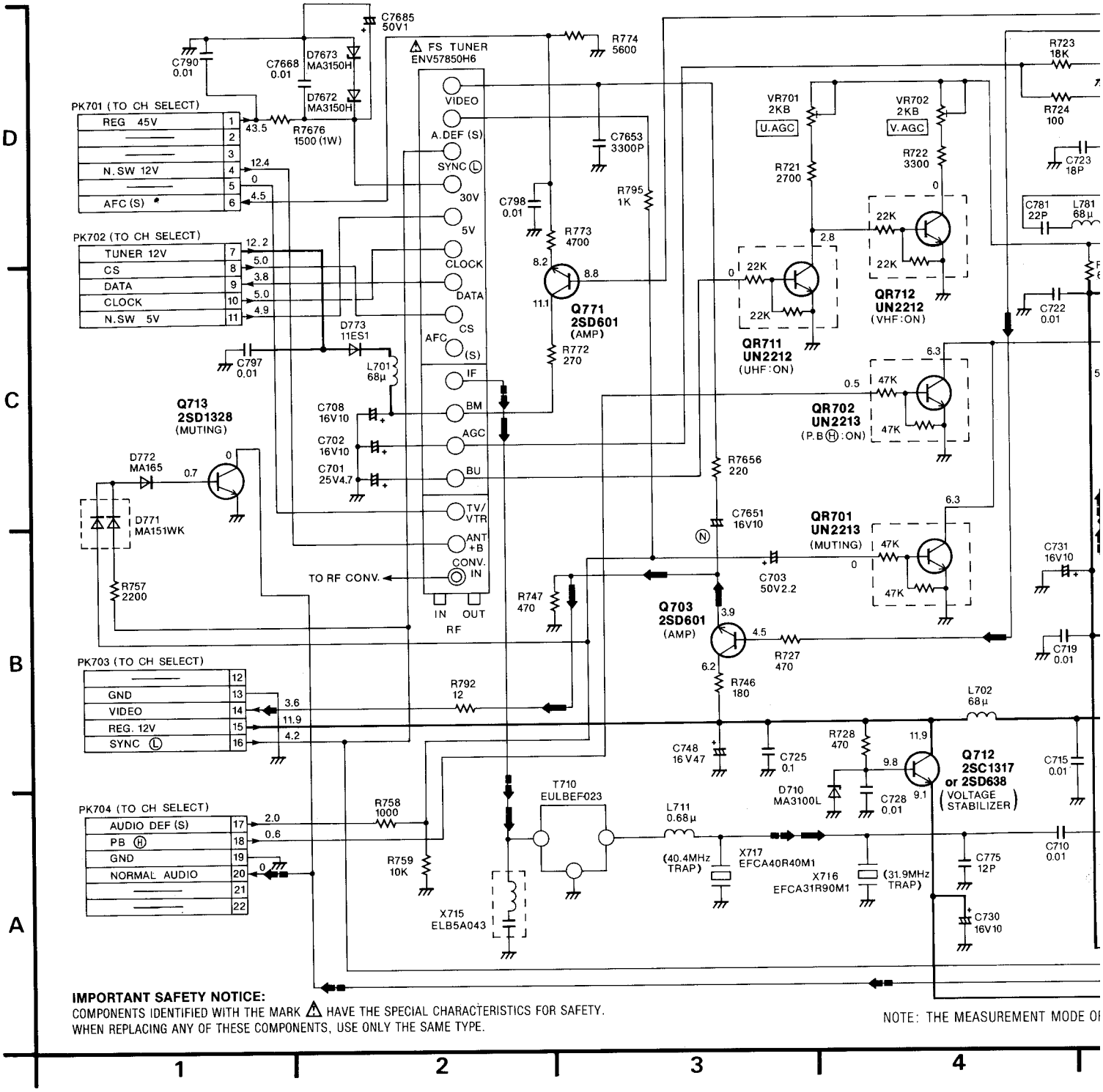

IMPORTANT SAFETY NOTICE:
COMPONENTS IDENTIFIED WITH THE MARK ⚠ HAVE THE SPECIAL CHARACTERISTICS FOR SAFETY.
WHEN REPLACING ANY OF THESE COMPONENTS, USE ONLY THE SAME TYPE.

NOTE: THE MEASUREMENT MODE OF

EG)

VIDEO SIGNAL PATH AUDIO SIGNAL PATH

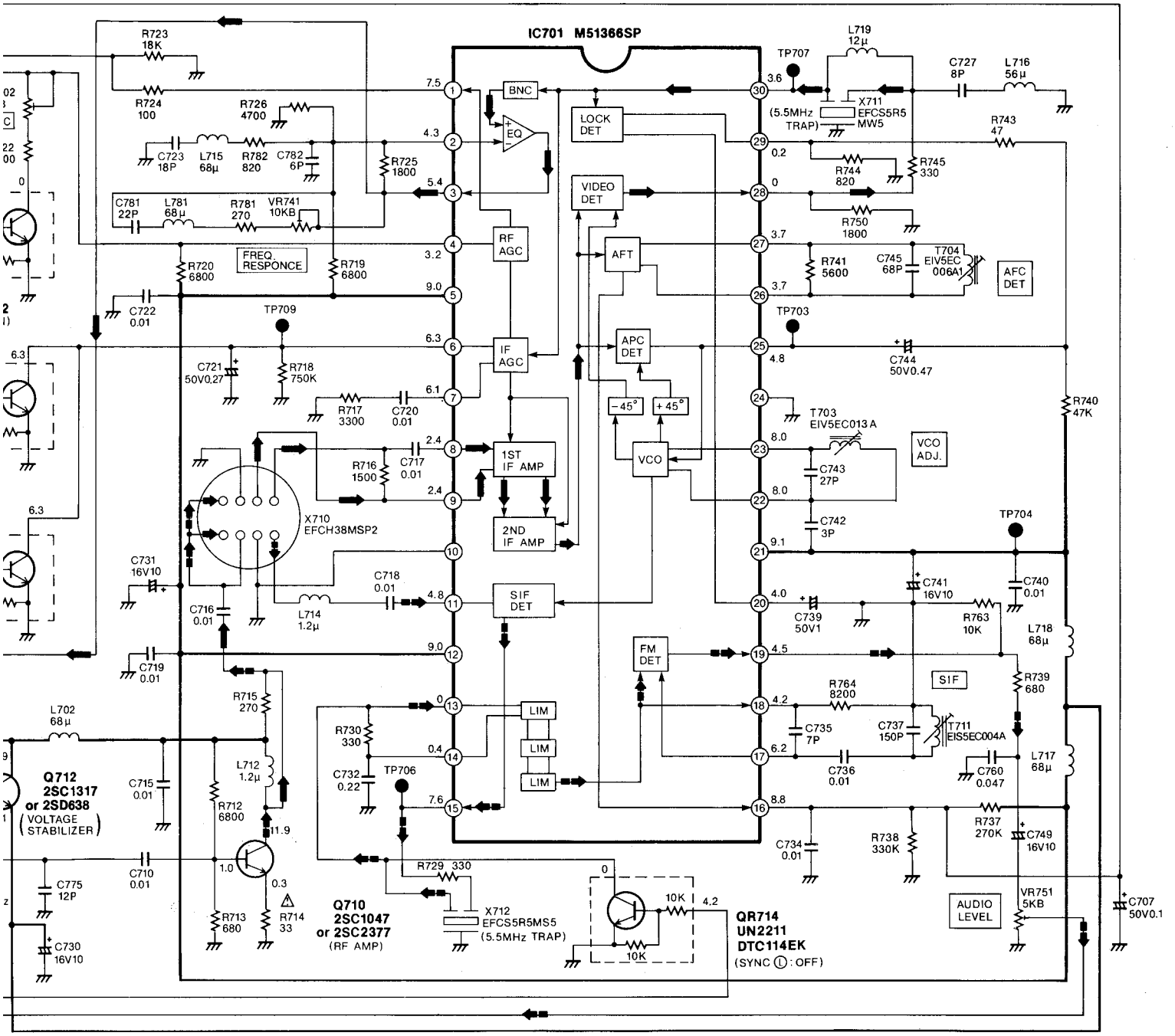

THE MEASUREMENT MODE OF THE DC VOLTAGE ON THIS DIAGRAM IS STOP MODE.

NOTE: DO NOT USE ANY PART NUMBER SHOWN ON THIS SCHEMATIC DIAGRAM FOR ORDERING. WHEN YOU ORDER A PART, PLEASE REFER TO PARTS LIST.

4 | 5 | 6 | 7 | 8

3-21. TV DEMODULATOR PACK SCHEMATIC DIAGRAM (NV-J35B)

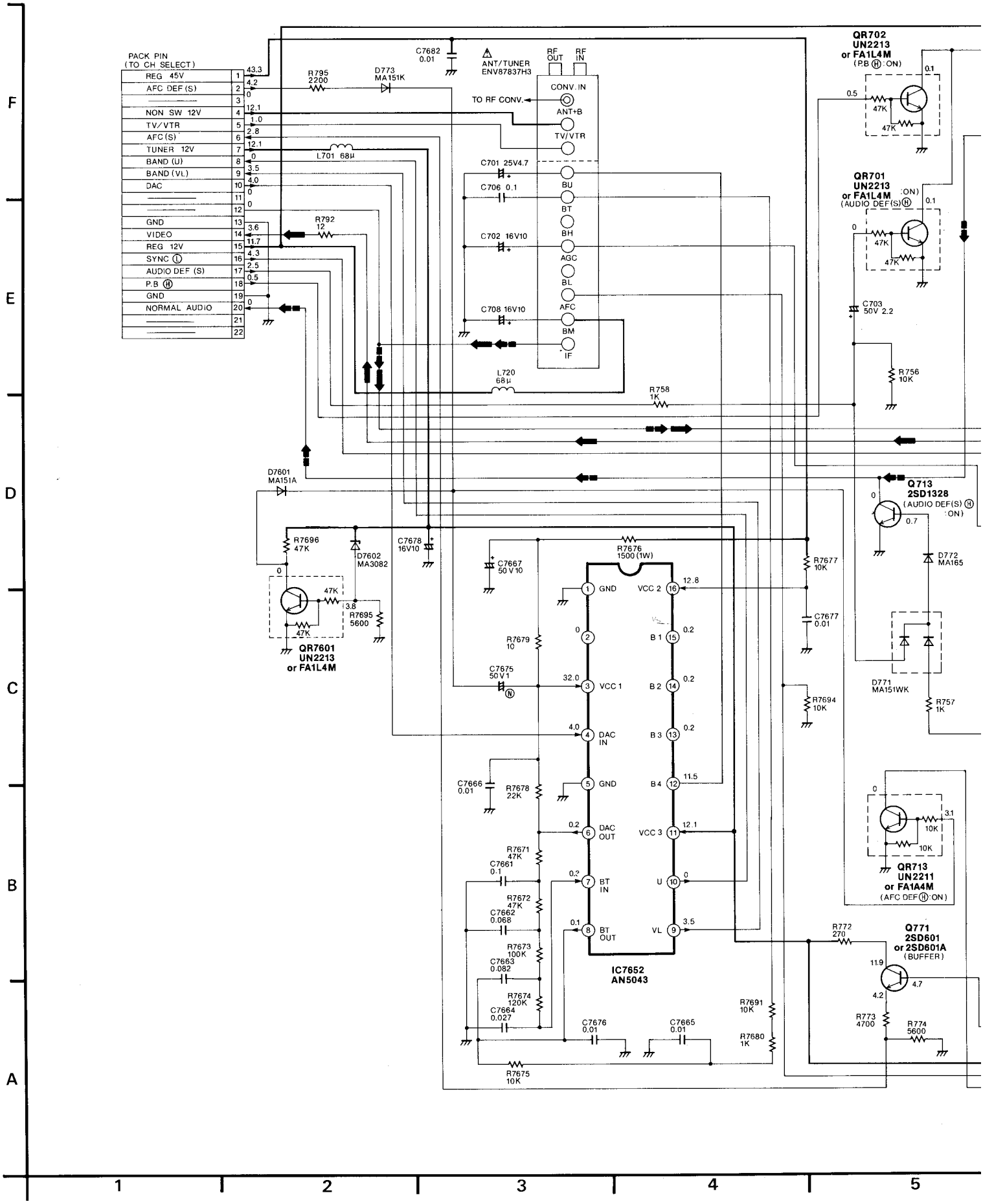

J35B)

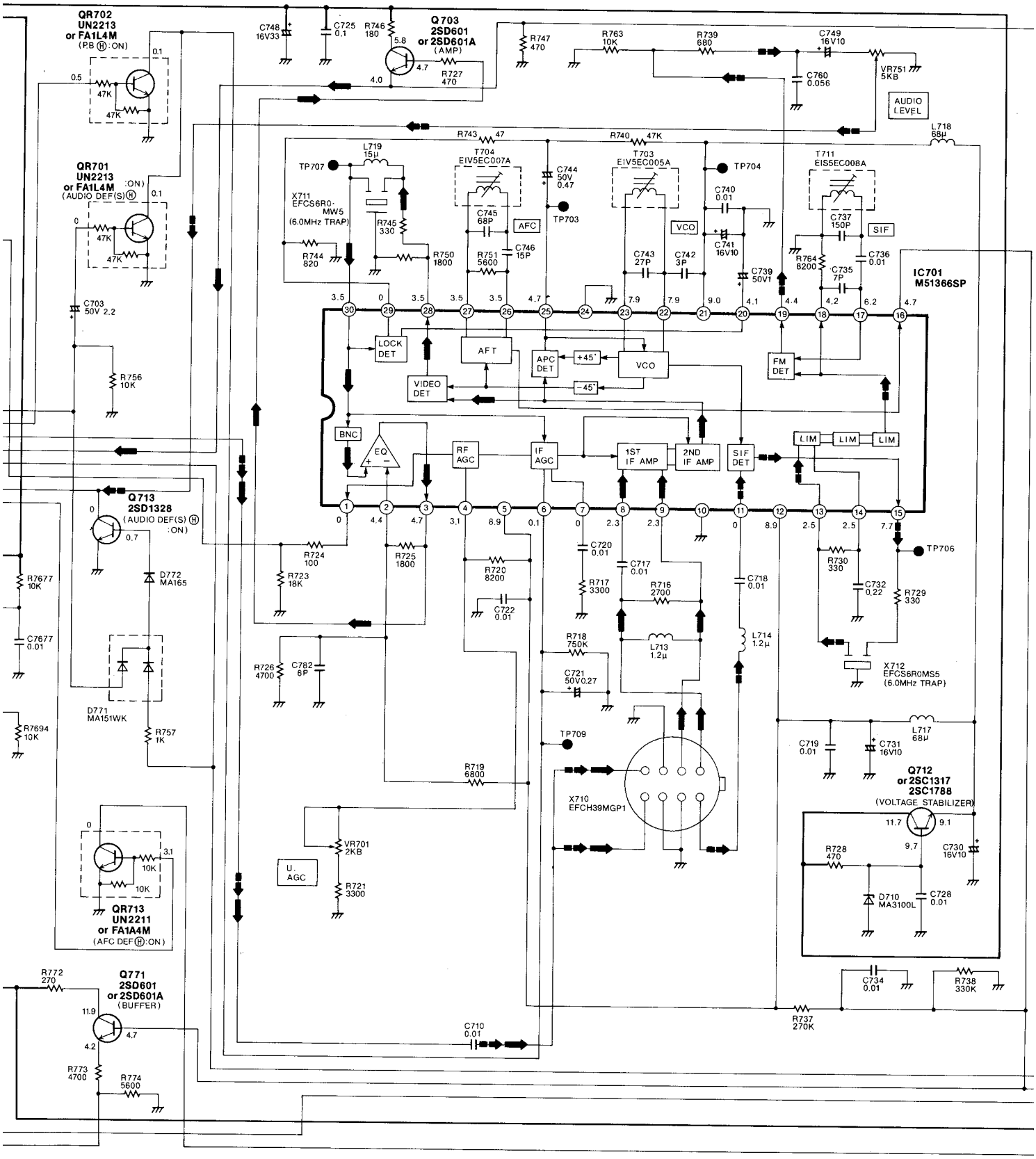

IMPORTANT SAFETY NOTICE:
COMPONENTS IDENTIFIED WITH THE MARK ⚠ HAVE THE SPECIAL CHARACTERISTICS FOR SAFETY.
WHEN REPLACING ANY OF THESE COMPONENTS, USE ONLY THE SAME TYPE.

NOTE: THE

5 6 7 8 9

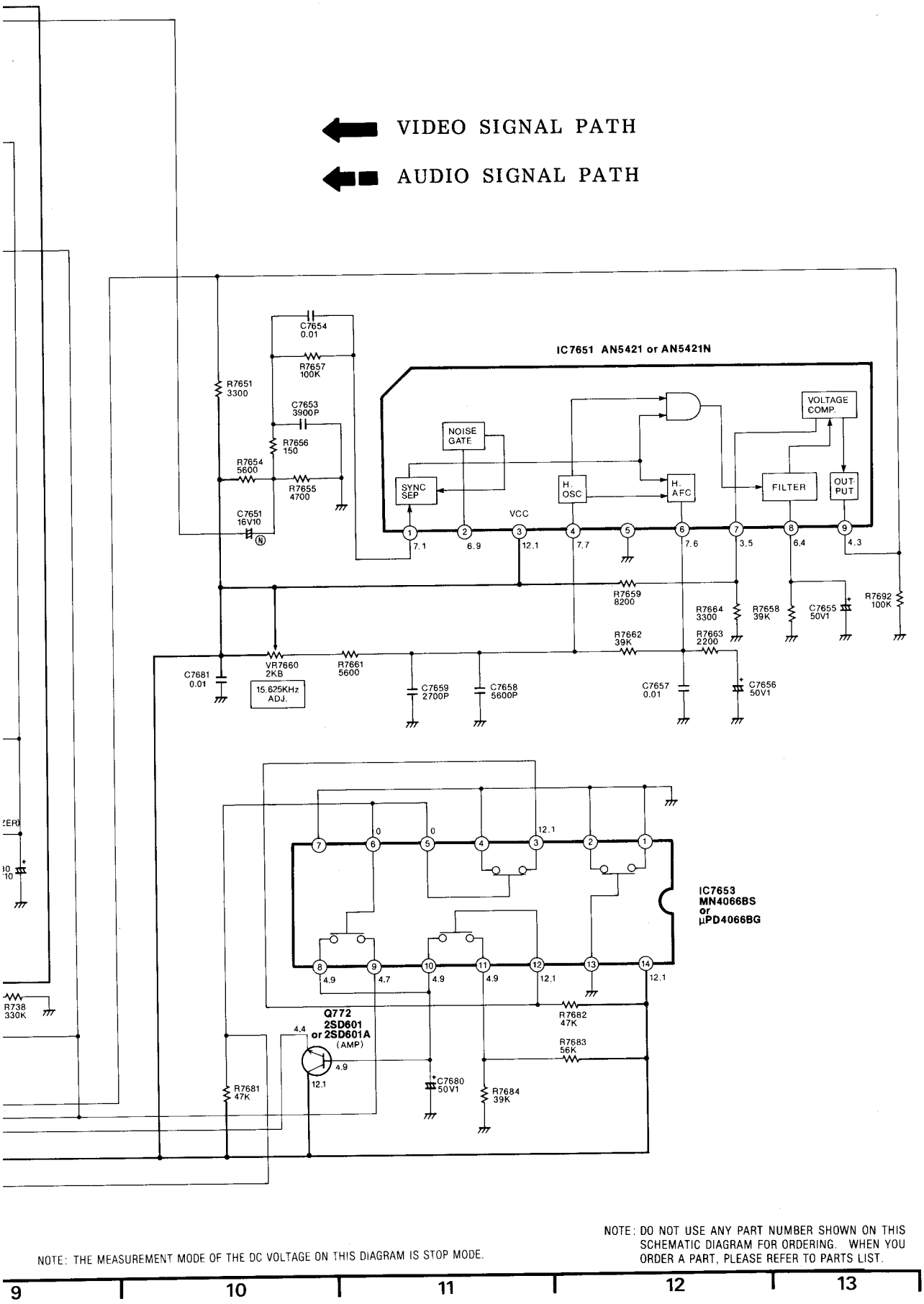

NOTE: THE MEASUREMENT MODE OF THE DC VOLTAGE ON THIS DIAGRAM IS STOP MODE.

NOTE: DO NOT USE ANY PART NUMBER SHOWN ON THIS SCHEMATIC DIAGRAM FOR ORDERING. WHEN YOU ORDER A PART, PLEASE REFER TO PARTS LIST.

9 10 11 12 13

3-22. TIMER & OPERATION SCHEMATIC DIAGRAM

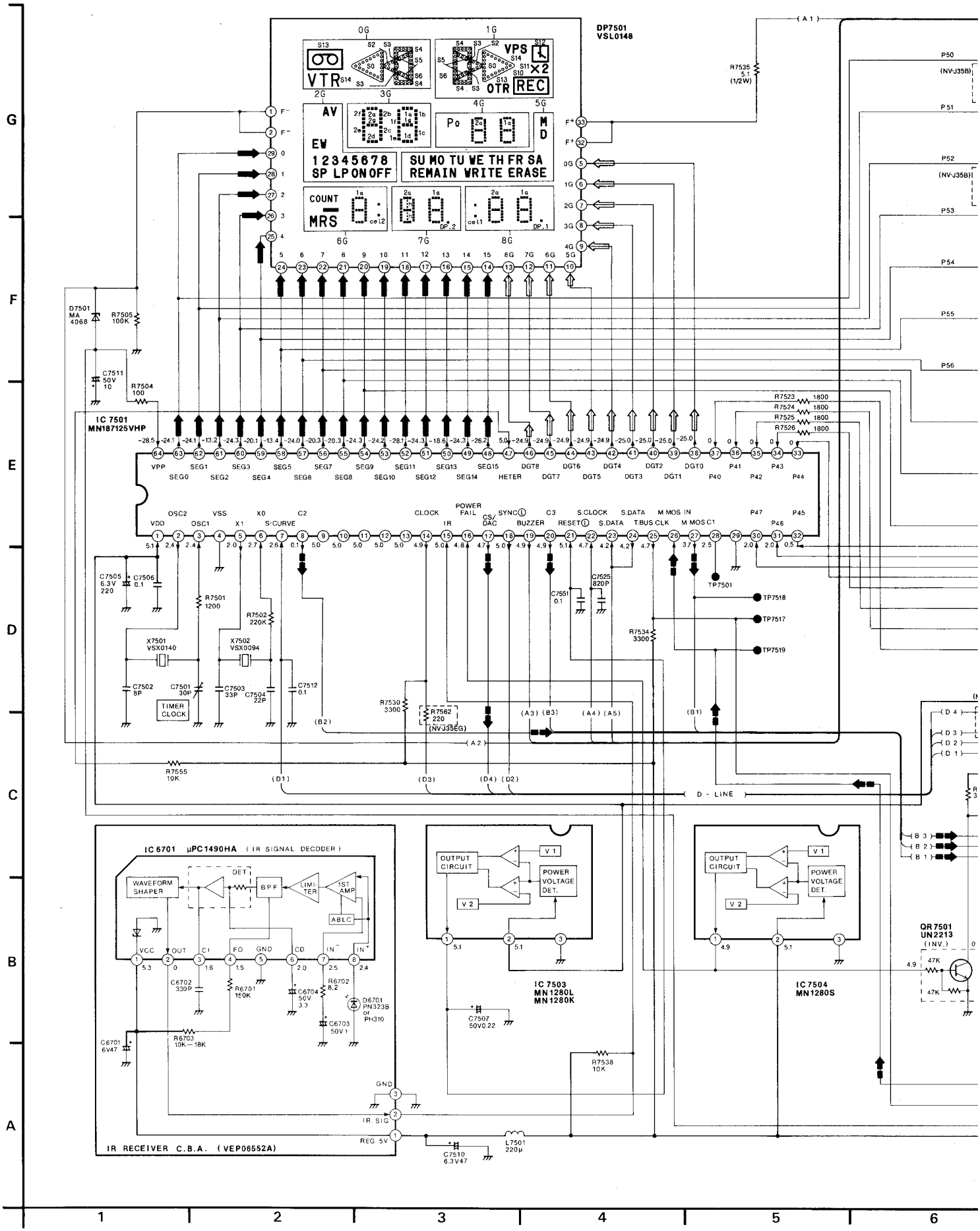

IENT CONTROL SIGNAL ⇦ GRID CONTROL SIGNAL ⬅■ TUNE CONTROL S

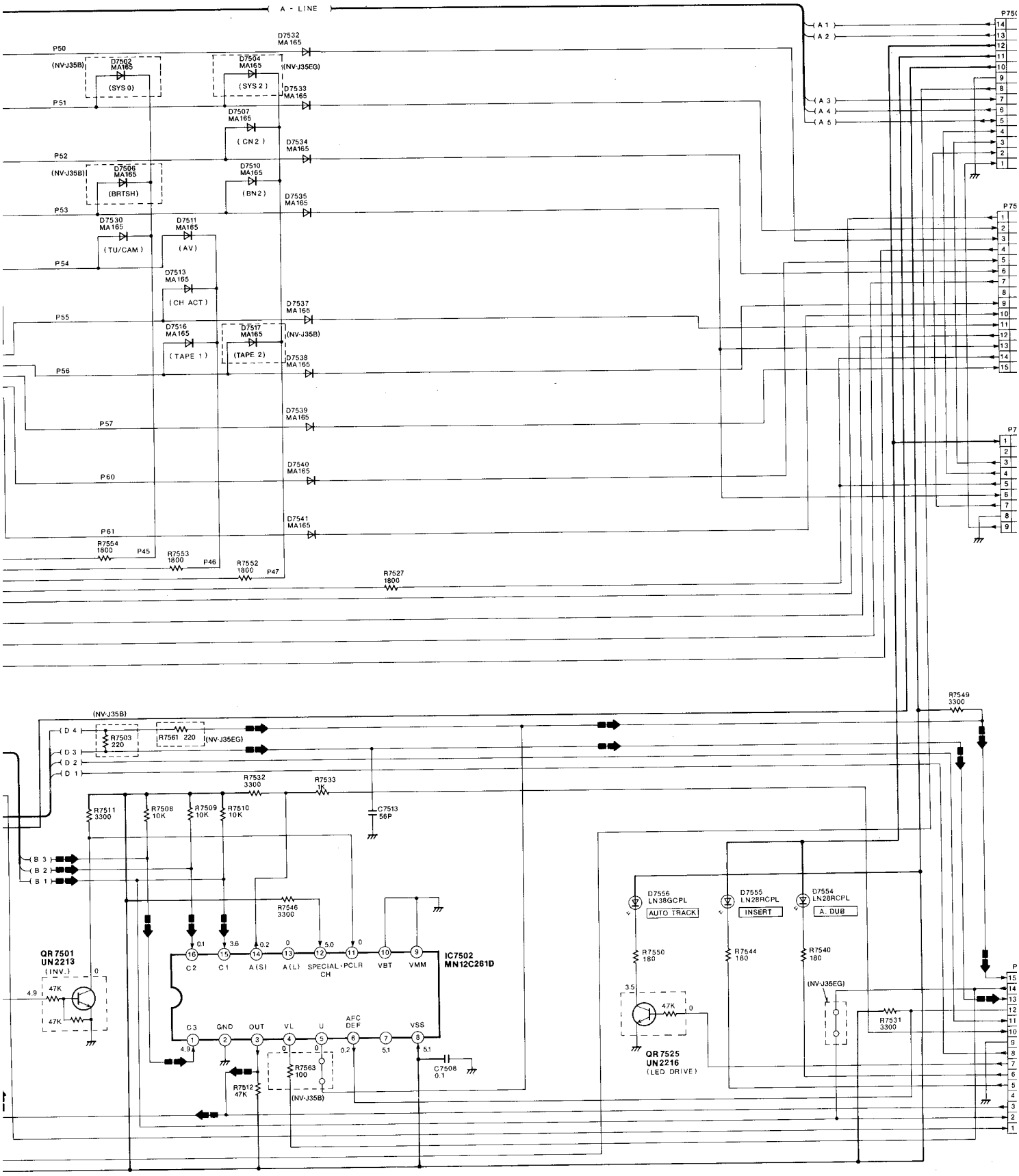

NOTE: DO NOT USE ANY PART NUMBER SHOWN ON THIS SCHEMATIC DIAGRAM FOR ORDERING. WHEN YOU ORDER A PART, PLEASE REFER TO PARTS LIST.

NOTE: THE MEASUREMENT MODE OF THE DC VOLTAGE ON THIS DIA

6 | 7 | 8 | 9 | 10 | 11

NE CONTROL SIGNAL

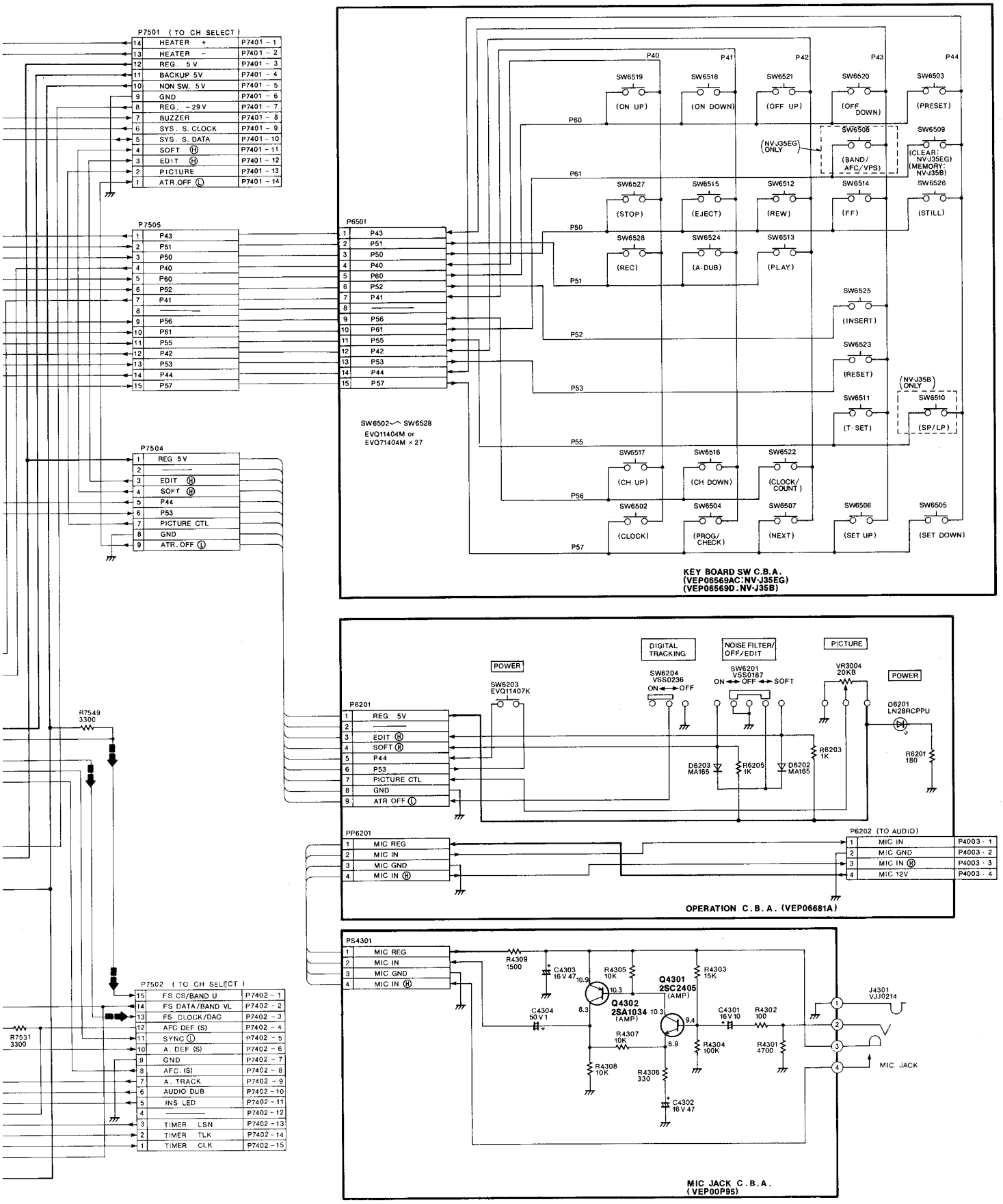

THE DC VOLTAGE ON THIS DIAGRAM IS STOP MODE.

11 | 12 | 13 | 14 | 15 | 16

3-24. VPS PACK SCHEMATIC DIAGRAM (NV-J35EG)

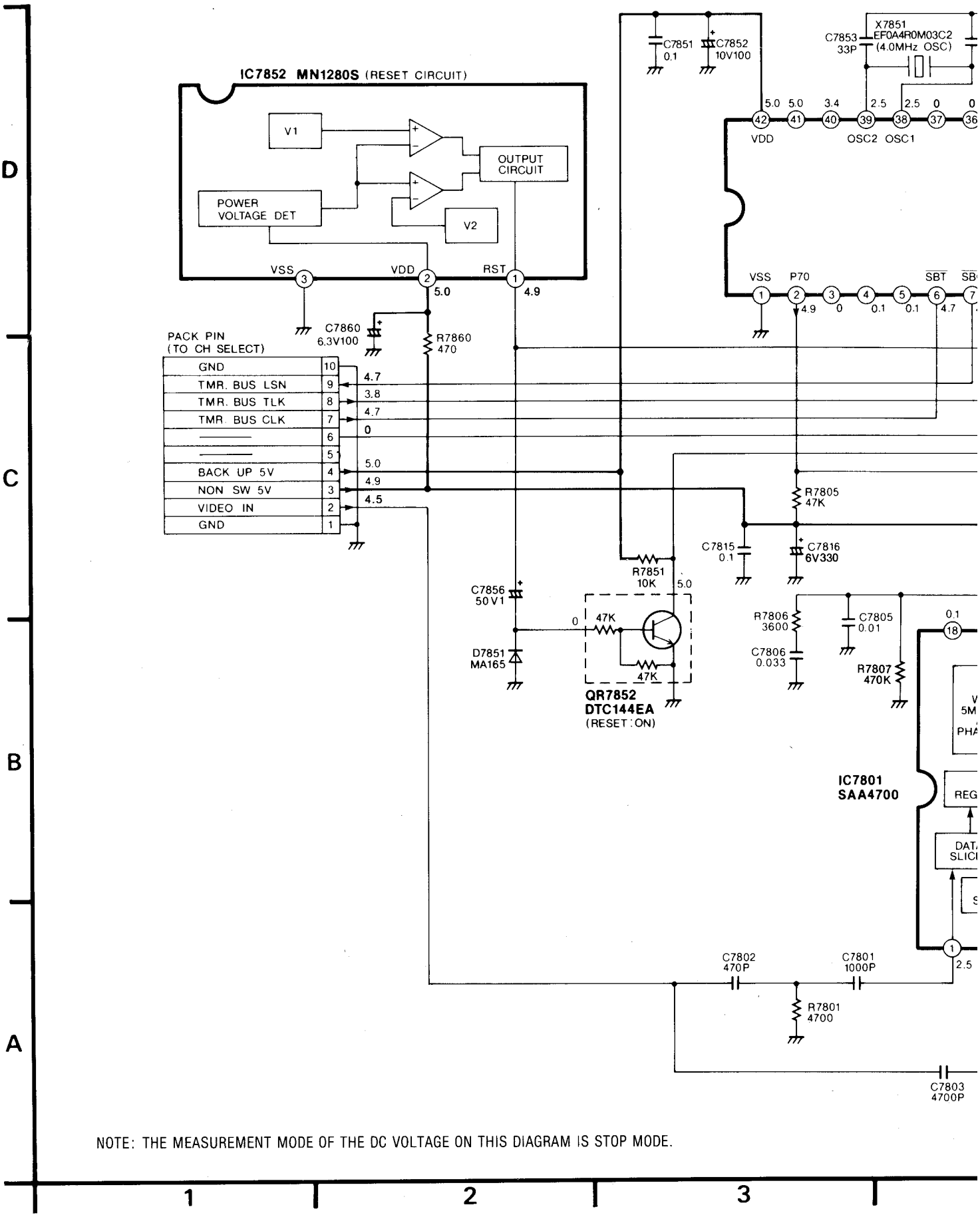

NOTE: THE MEASUREMENT MODE OF THE DC VOLTAGE ON THIS DIAGRAM IS STOP MODE.

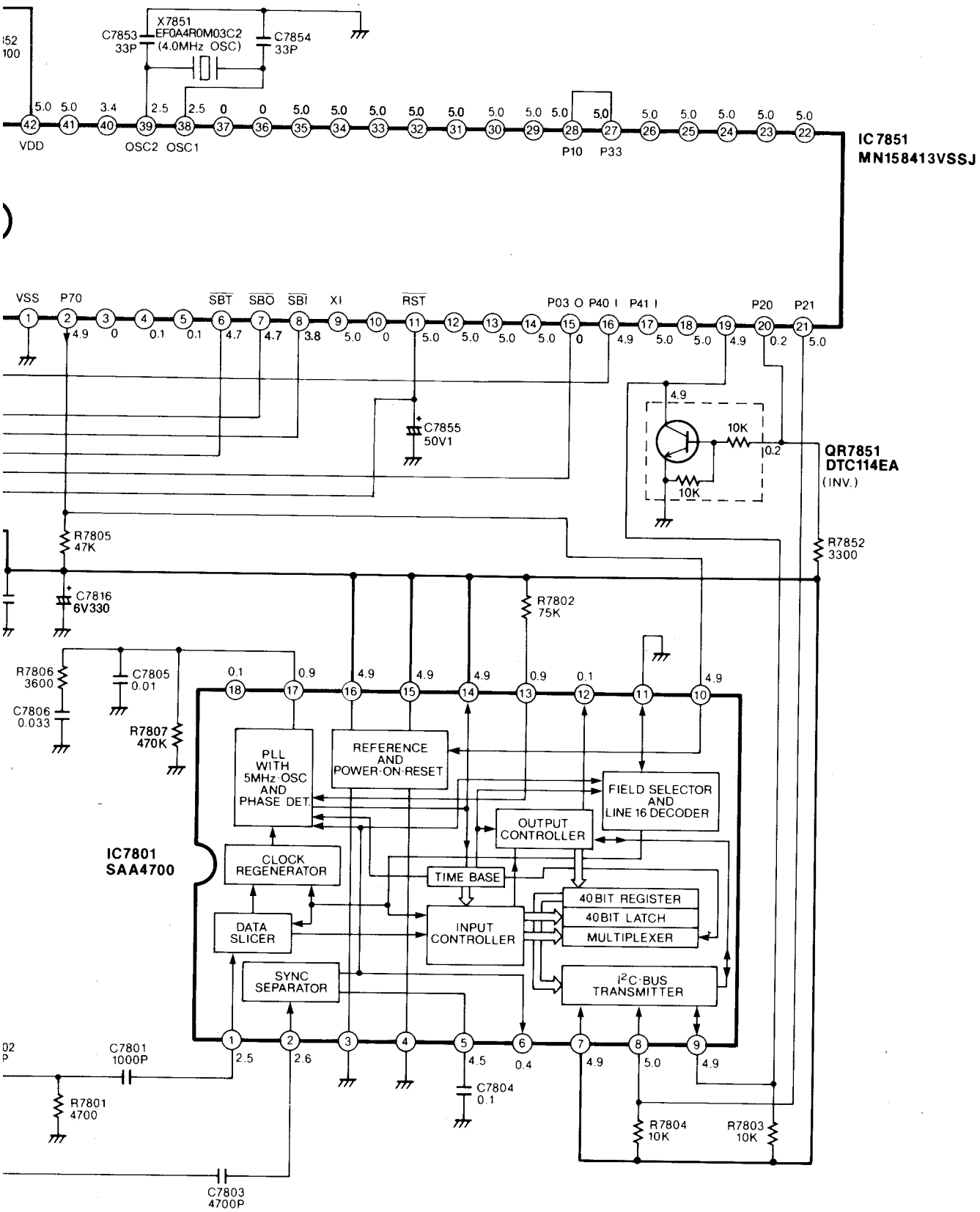

NOTE: DO NOT USE ANY PART NUMBER SHOWN ON THIS SCHEMATIC DIAGRAM FOR ORDERING. WHEN YOU ORDER A PART, PLEASE REFER TO PARTS LIST.

3-26. RF CONVERTER SCHEMATIC DIAGRAM (ENC17976: NV-J35EG)

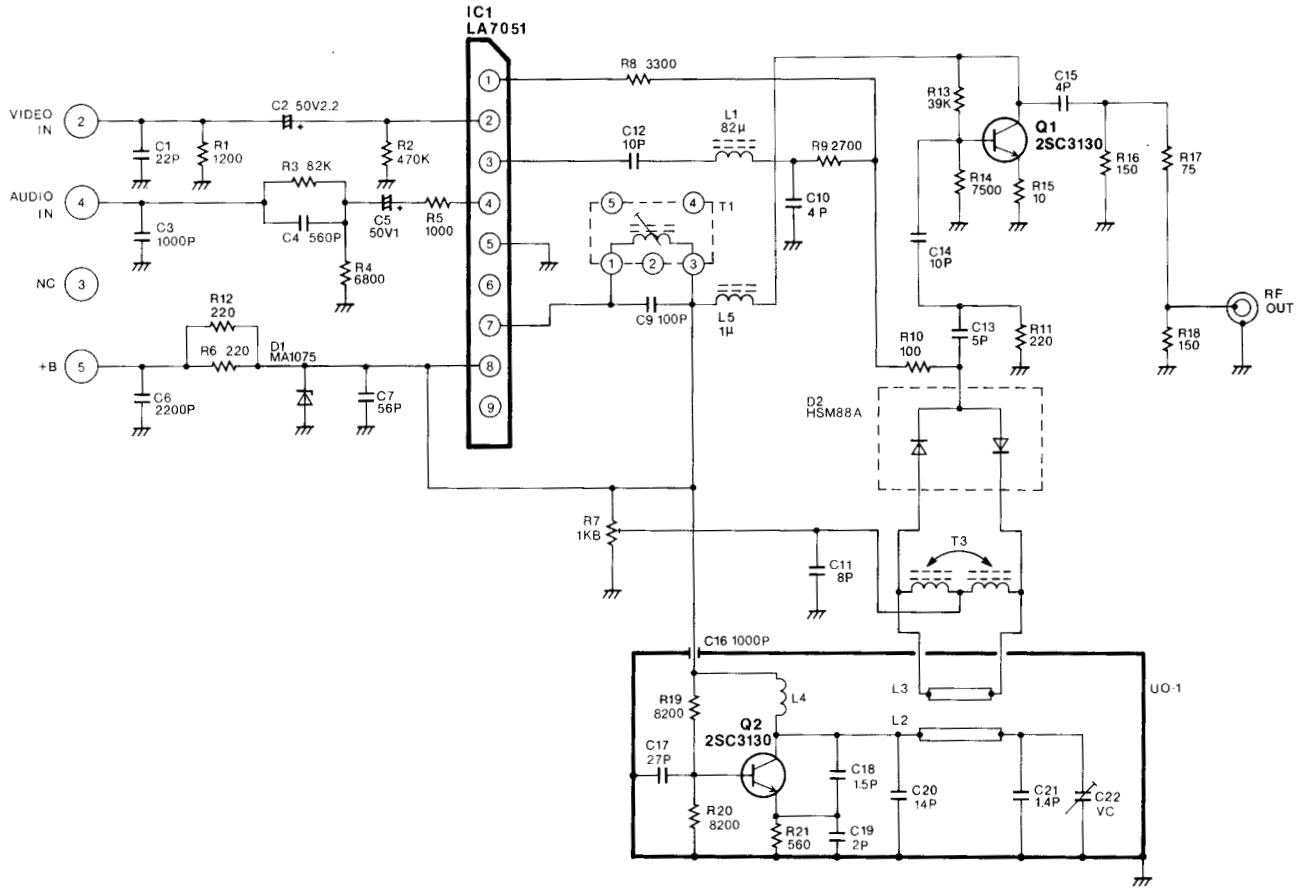

3-27. RF CONVERTER SCHEMATIC DIAGRAM (VEQ1043: NV-J35EG)

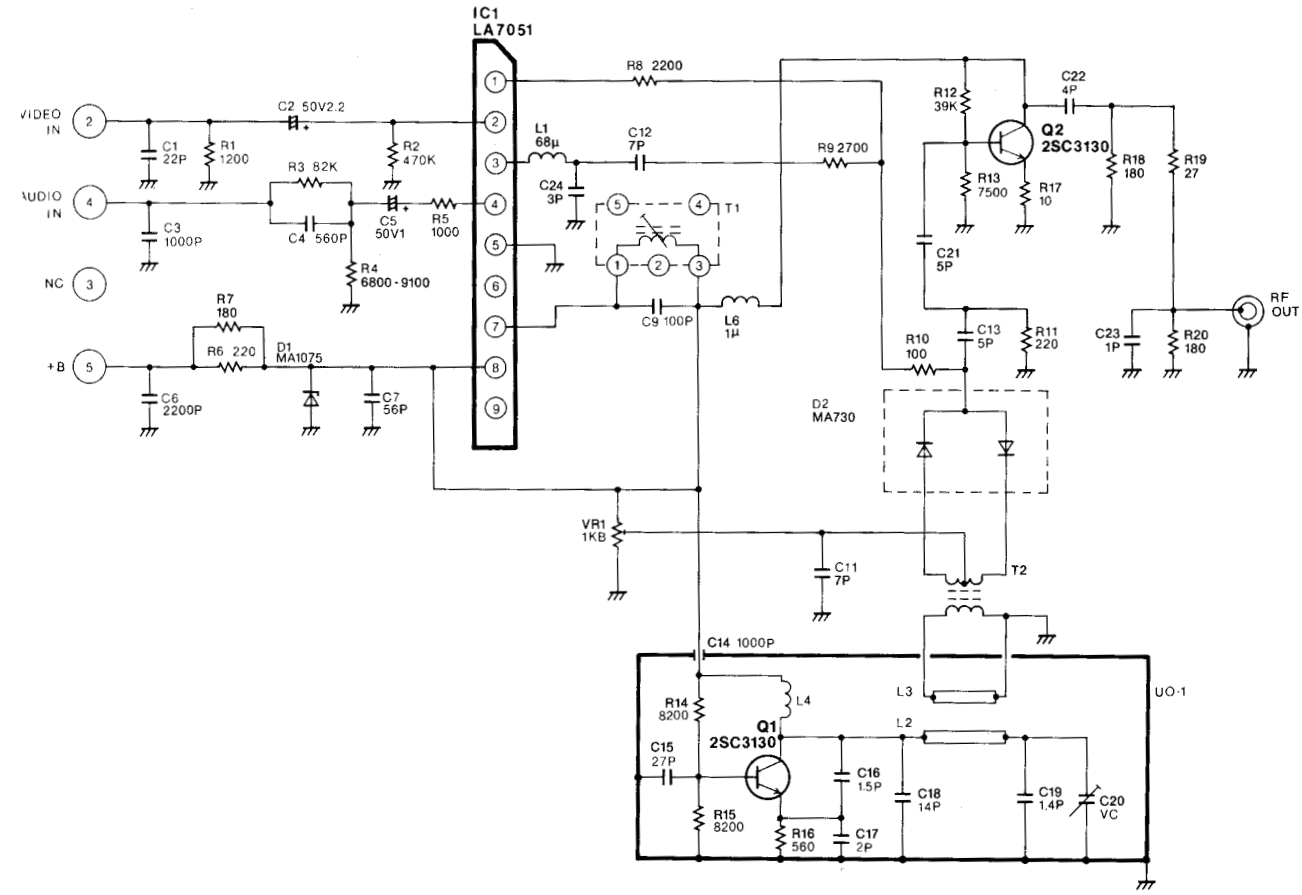

3-28. RF CONVERTER SCHEMATIC DIAGRAM (ENC17972A: NV-J35B)

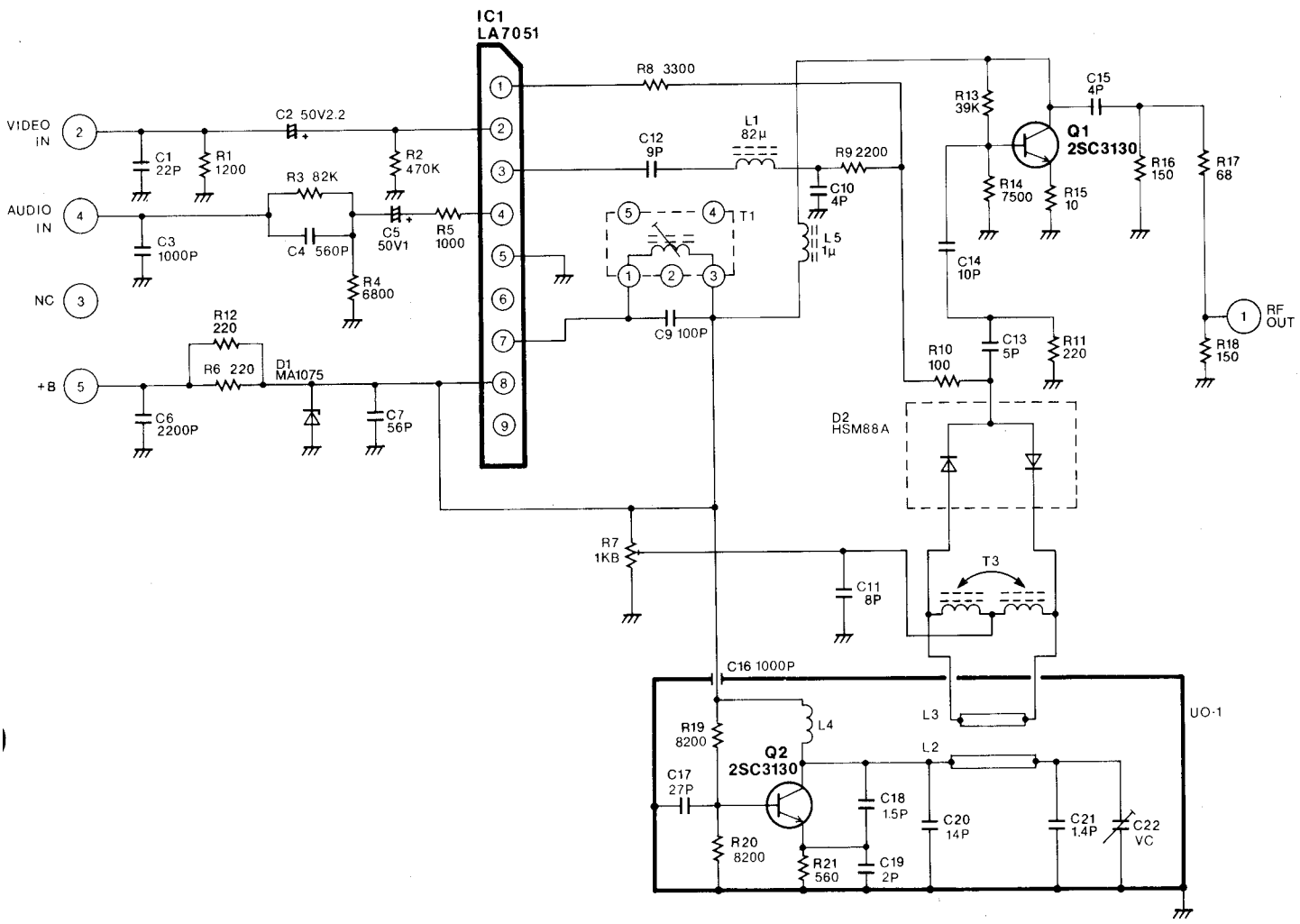

3-30. REMOTE CONTROLLER (BUILD IN DIGITAL SCANNER) SCHEMATIC

— UNIT NO.: VEQ1120 (NV-J35EG), VEQ1119 (NV-J35B) —

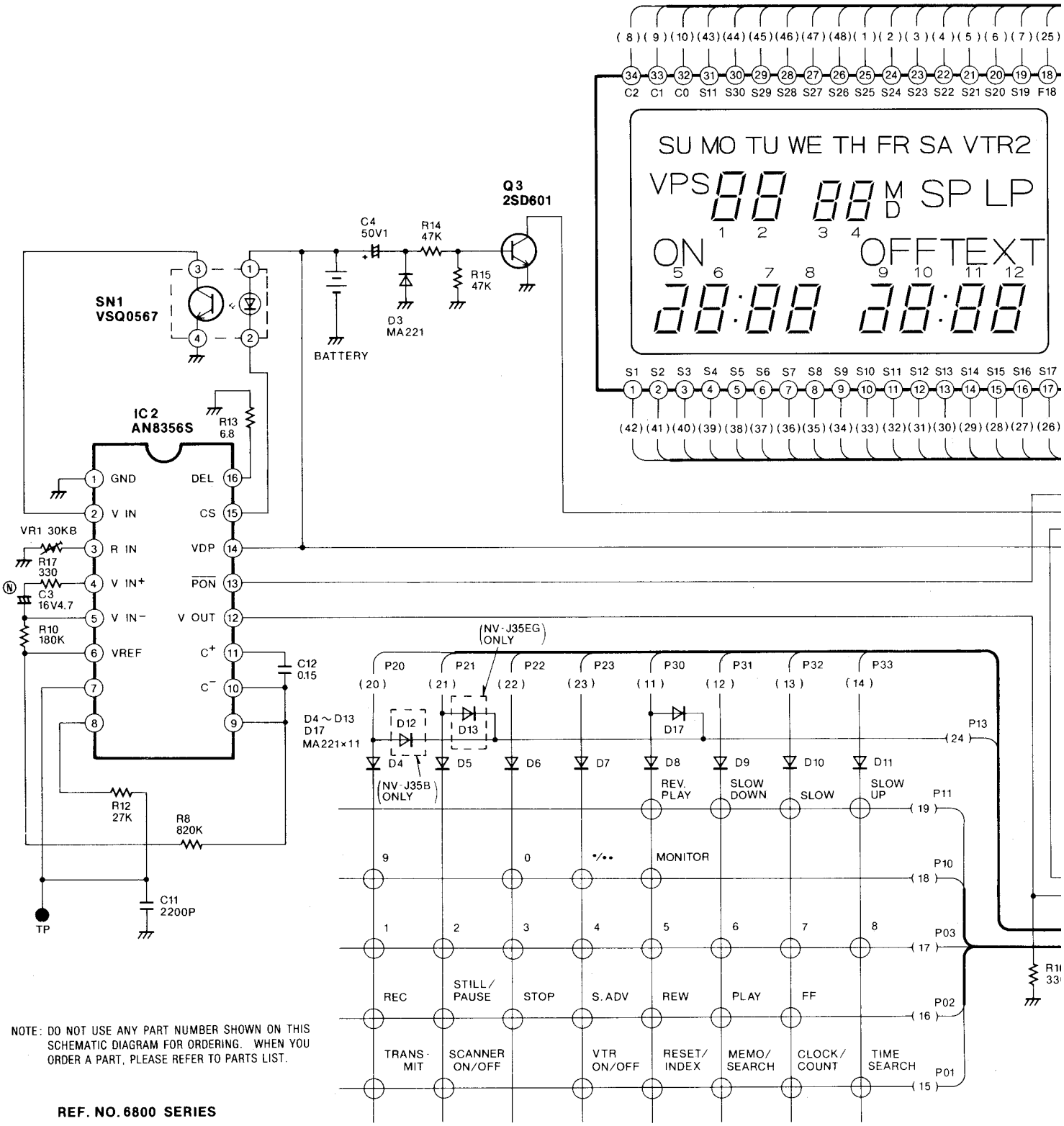

NOTE: DO NOT USE ANY PART NUMBER SHOWN ON THIS SCHEMATIC DIAGRAM FOR ORDERING. WHEN YOU ORDER A PART, PLEASE REFER TO PARTS LIST.

REF. NO. 6800 SERIES

CHEMATIC DIAGRAM

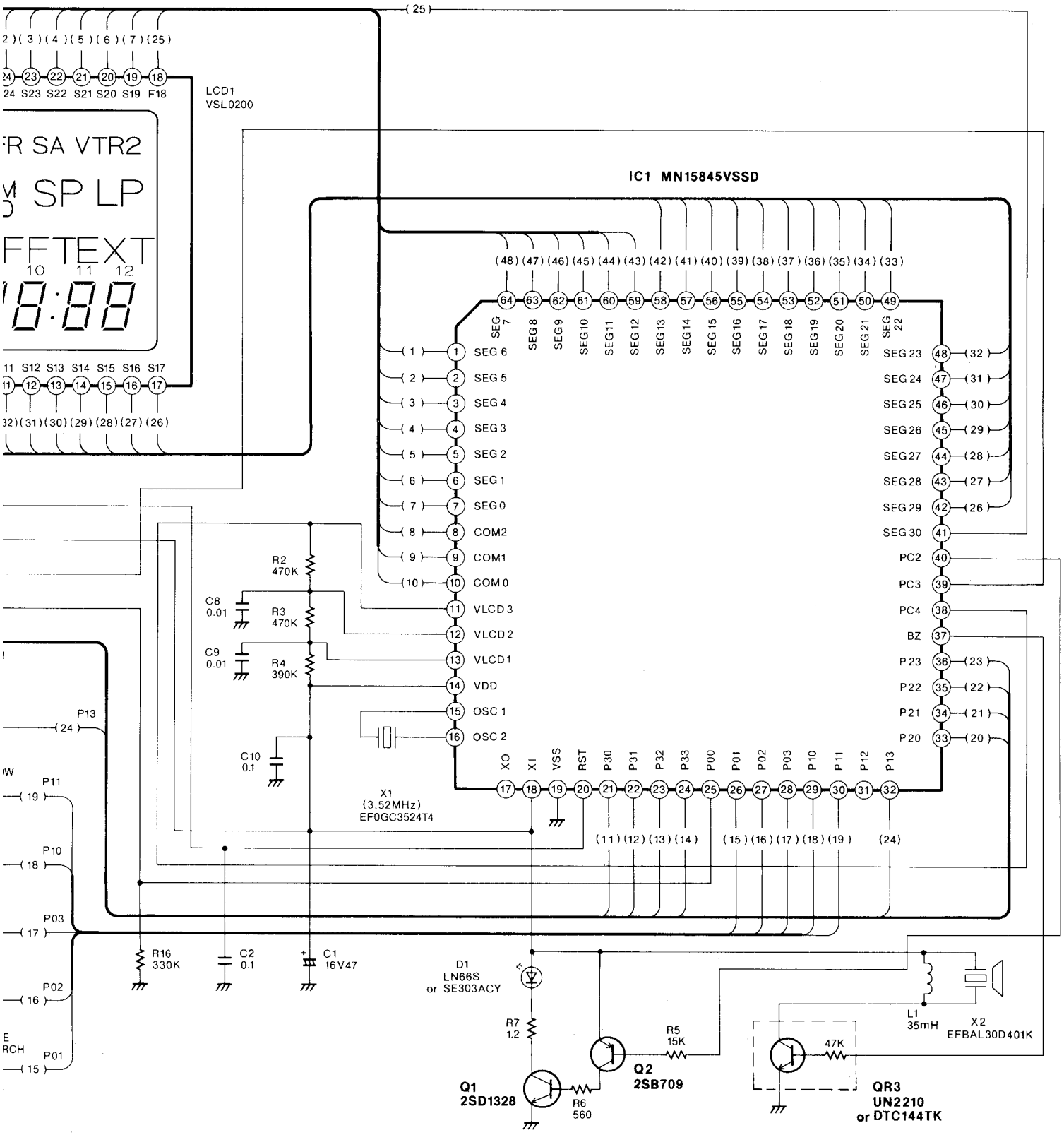

3-32. INTERCONNECTION SCHEMATIC DIAGRAM

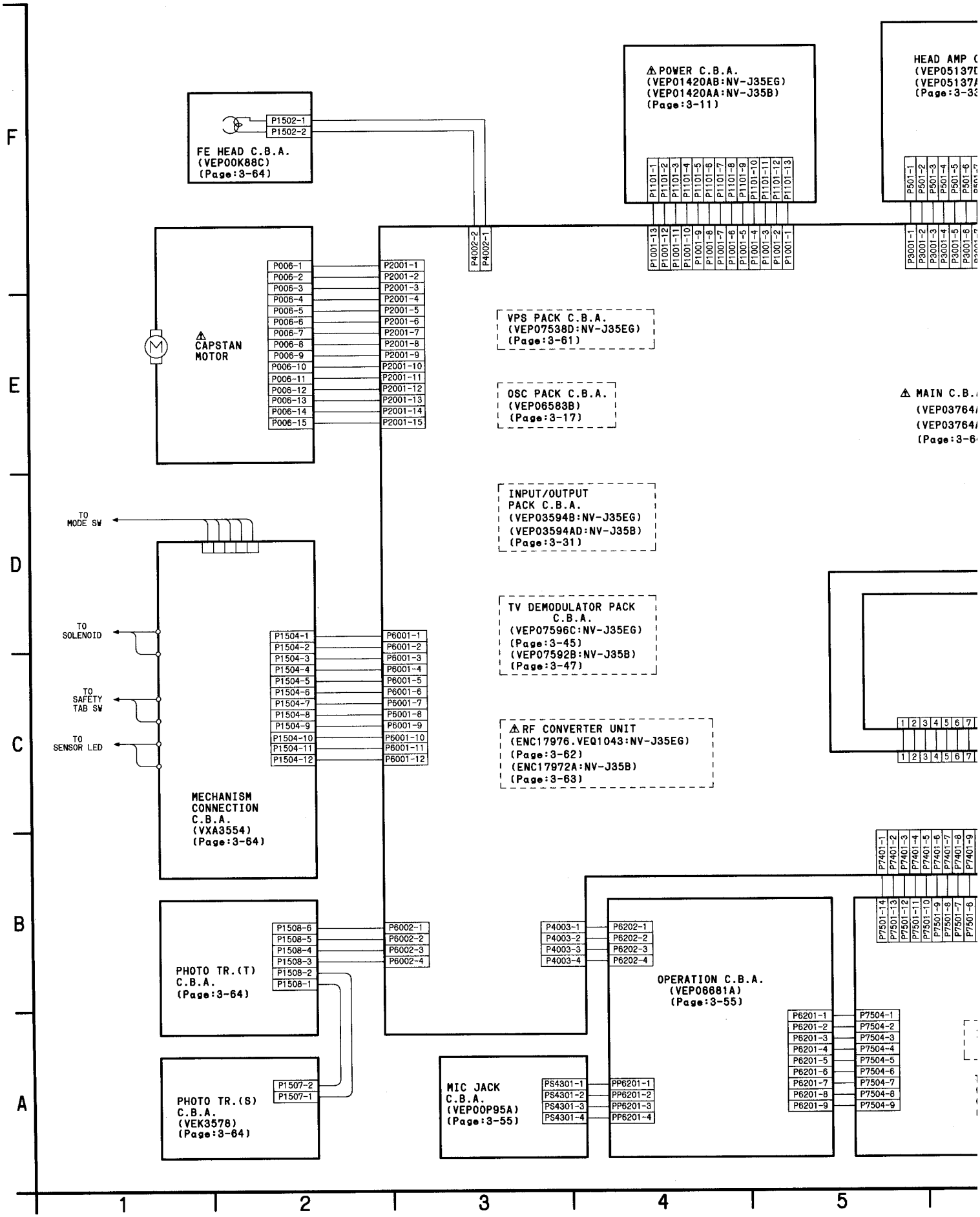

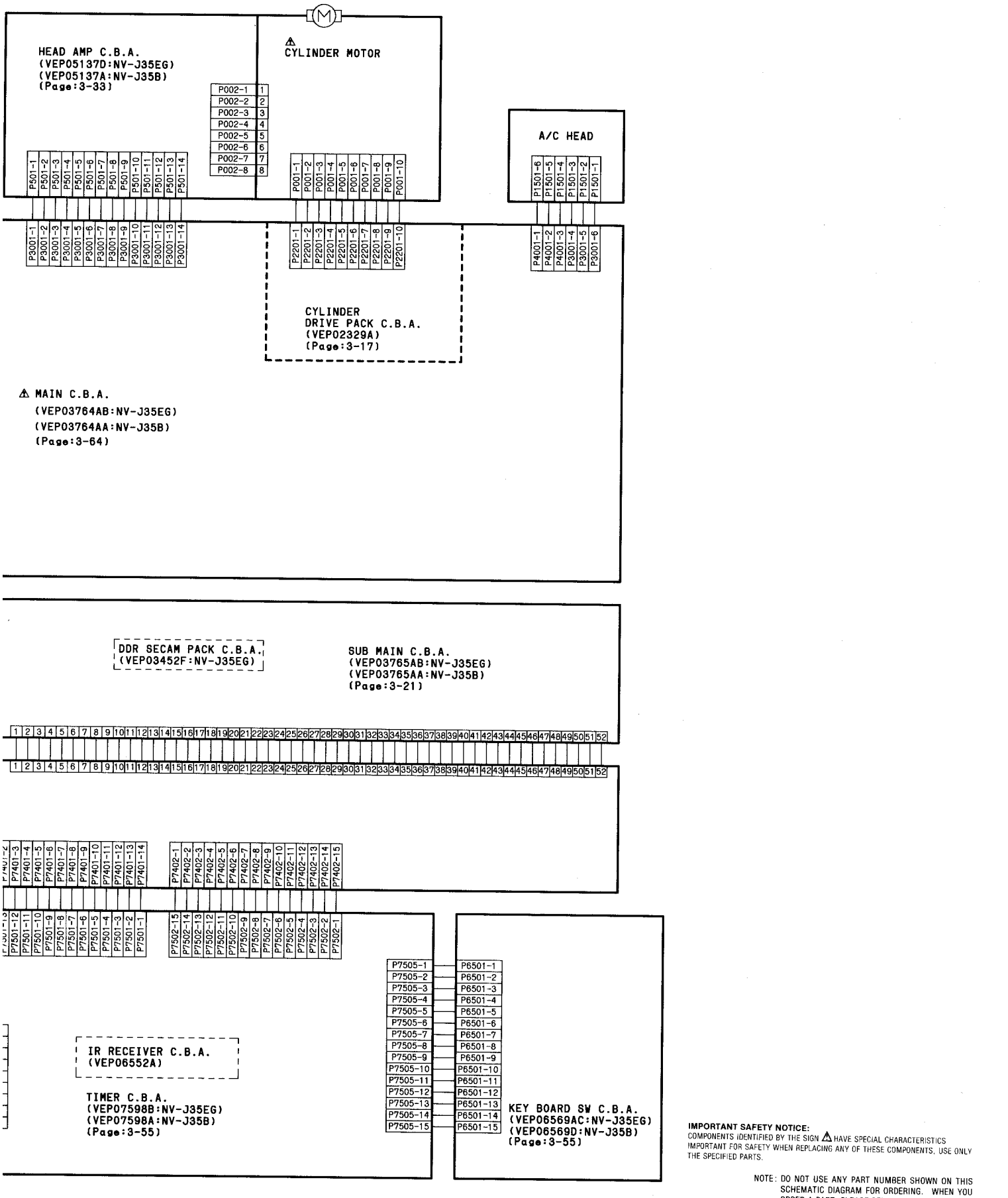

IMPORTANT SAFETY NOTICE:
COMPONENTS IDENTIFIED BY THE SIGN ⚠ HAVE SPECIAL CHARACTERISTICS IMPORTANT FOR SAFETY WHEN REPLACING ANY OF THESE COMPONENTS. USE ONLY THE SPECIFIED PARTS.

NOTE: DO NOT USE ANY PART NUMBER SHOWN ON THIS SCHEMATIC DIAGRAM FOR ORDERING. WHEN YOU ORDER A PART, PLEASE REFER TO PARTS LIST.

6 7 8 9 10

3-33. ICs & TRs INFORMATION

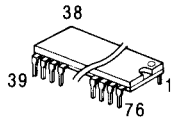

MN6740VCQK

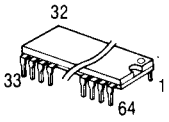

MN187125VHP

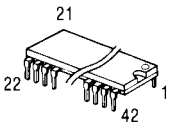

MN158413VSSJ

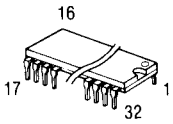

BA7274S
BA7766AS

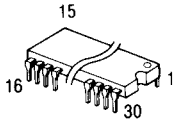

M51366SP
AN3496K

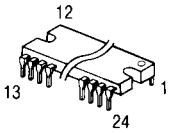

BA6435S

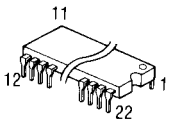

LA7150

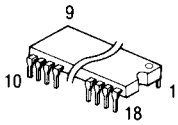

SAA4700

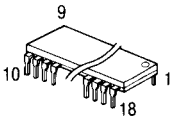

AN3814K

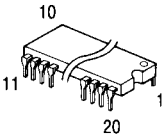

M52063SP

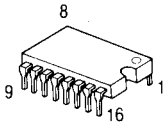

AN5043
MN12C261D

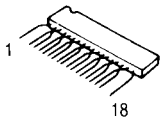

BA7025L

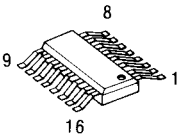

CF77384NS
M52055P

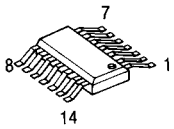

μPD4066BG
MN4066BS

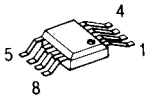

BA6305F

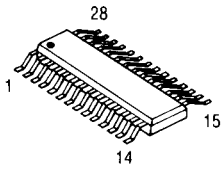

MN15522VMS

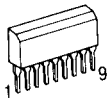

μPC358HA
μPC393HA

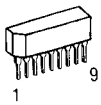

AN5421

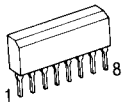

μPC1490HA

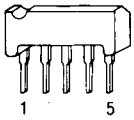

BA7004

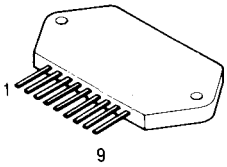

STK5392

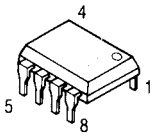

MSM6965-3RS

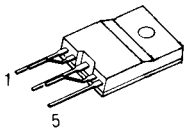

STRD1816

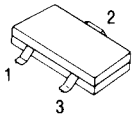

MN12821R

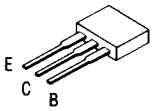

2SA1309

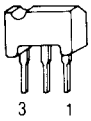

MN1280L
MN1280S
MN1280K

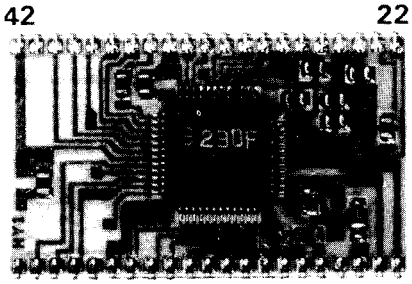

VEFH03D

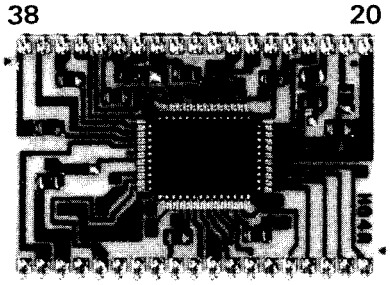

VEFH04F

2SC2206
2SC2377
2SD638
2SD1330
2SD637
2SD973

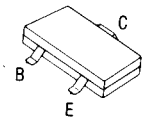

2SA1034 2SD602
2SB710 MSB709
2SC2405 MSC2295
2SC2295 MSD601
2SD1328
2SD601

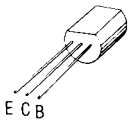

2SC1047
2SC1317
2SD893

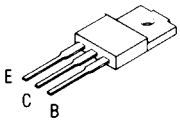

2SD1273

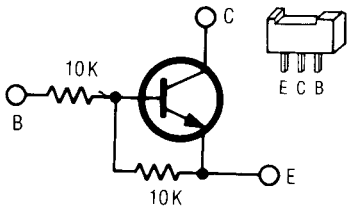

UN1211
DTC114EA

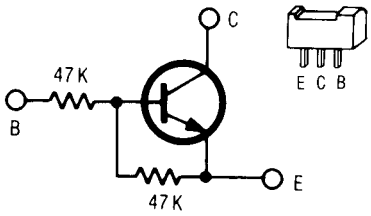

UN1213
DTC144EA

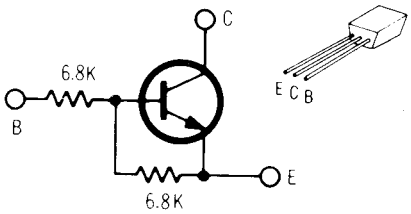

2SD1676

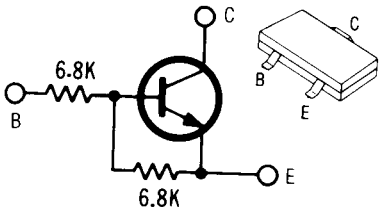

DTC363EK

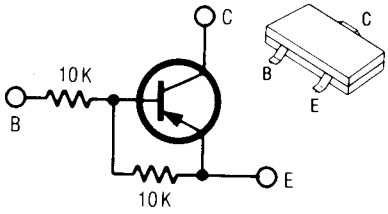

UN2111
MRN2402

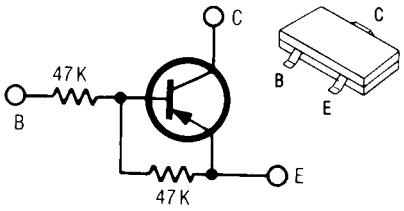

UN2113
MRN2404

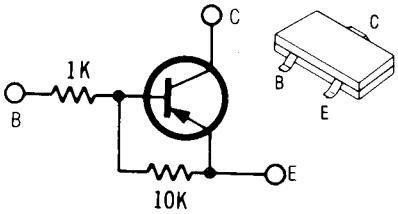

UN2119

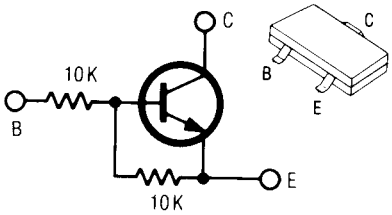

UN2211
MRN1402
DTC114EK

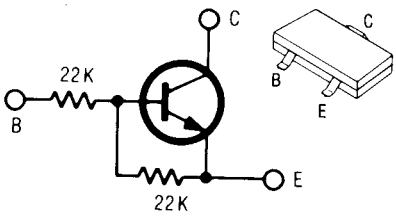

UN2212
MRN1403

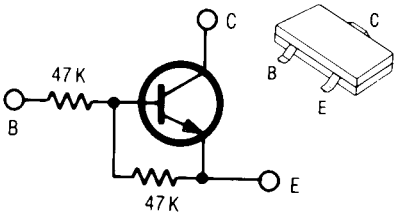

UN2213
MRN1404
DTC144EK

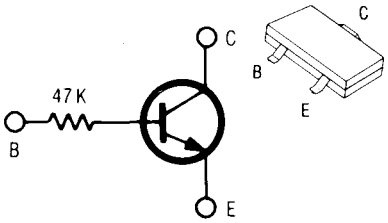

UN2216
DTC143TK

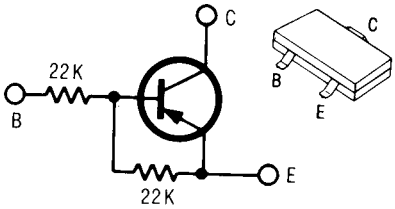

UN2112
DTA124EK
MRN2403

SECTION 4
EXPLODED VIEWS & PARTS LIST

4-1. EXPLODED VIEW ❶ CHASSIS PARTS SECTION (1)

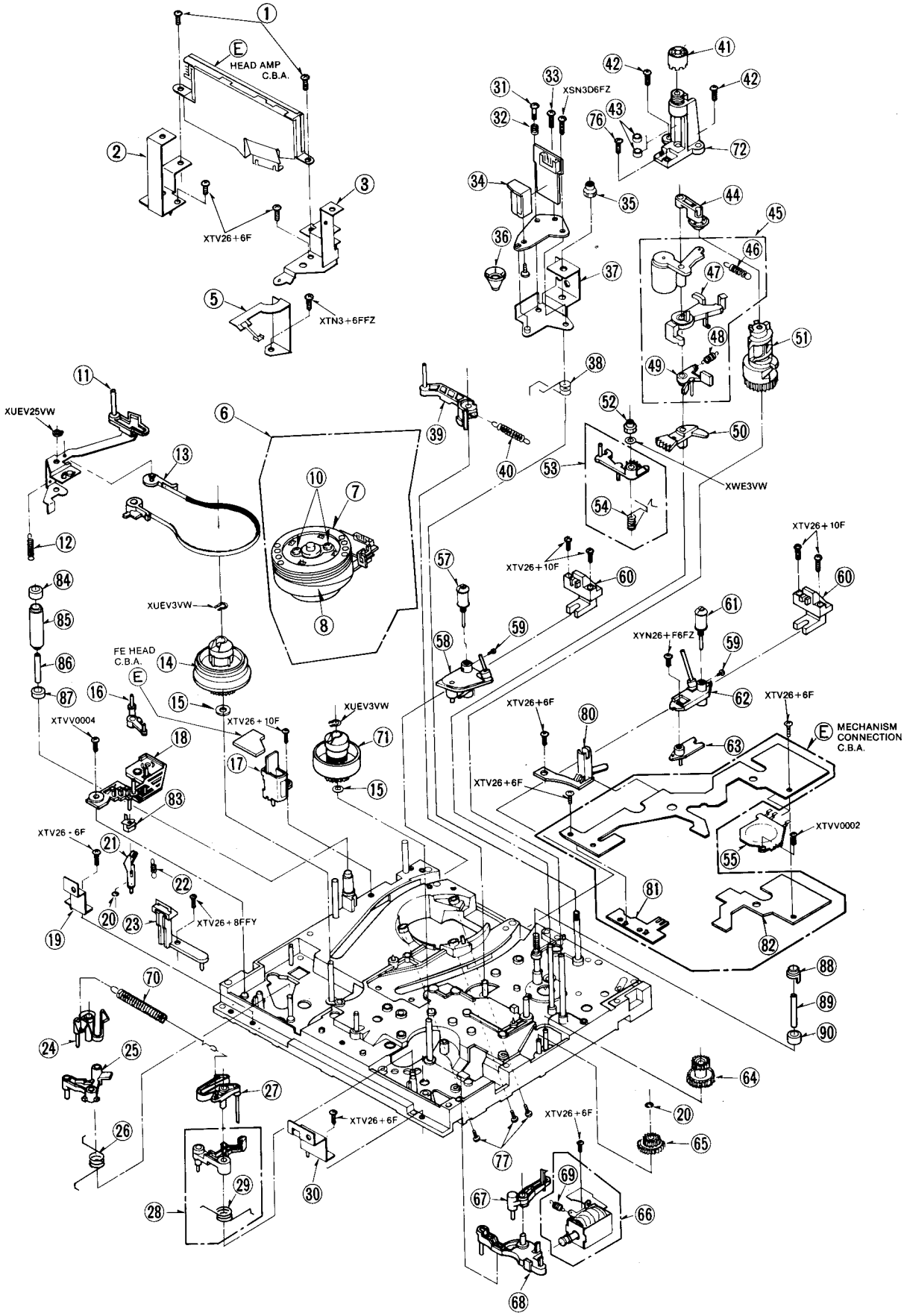

❷ CHASSIS PARTS SECTION (2)

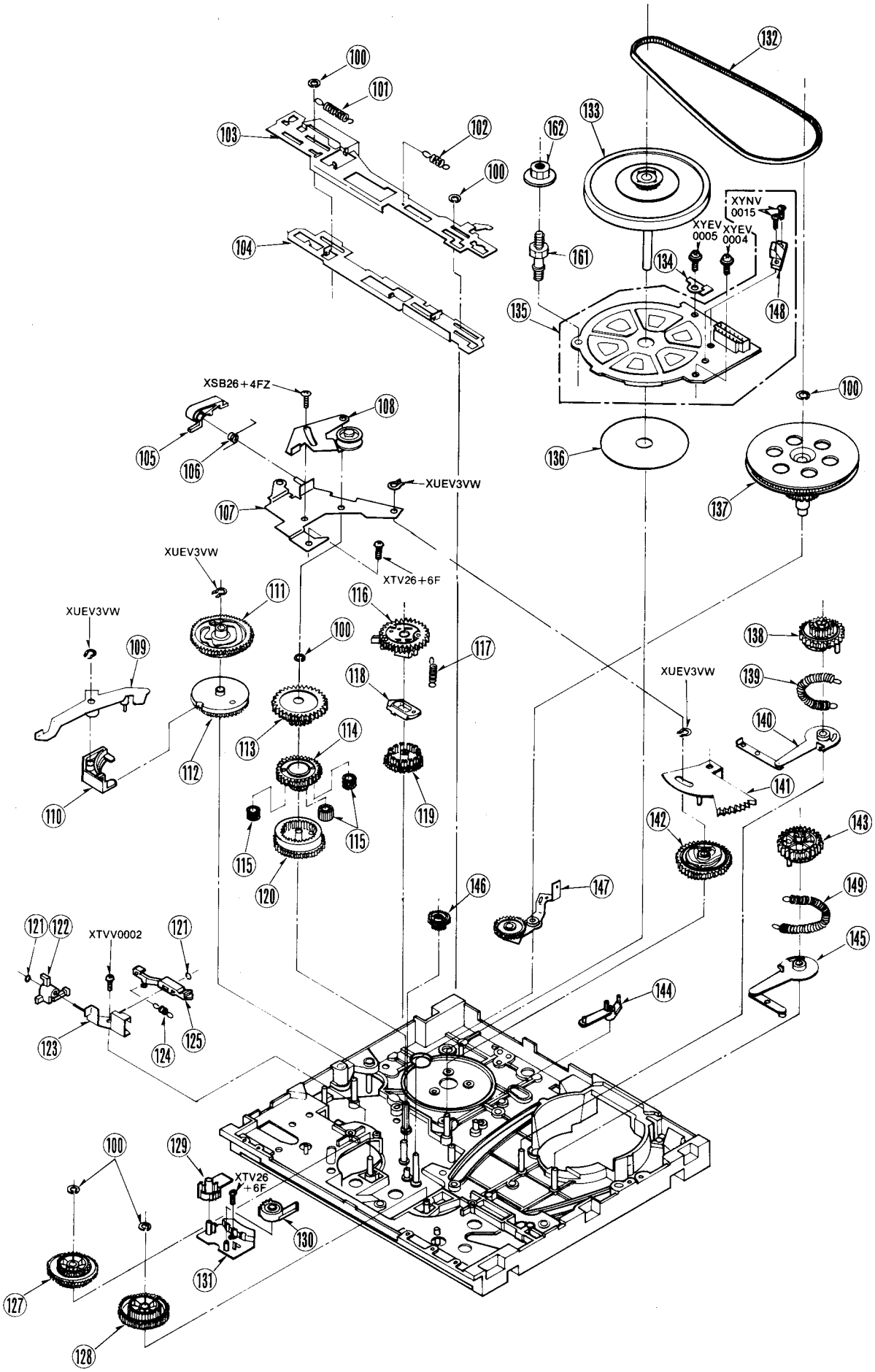

❸ CASSETTE UP MECHANISM SECTION

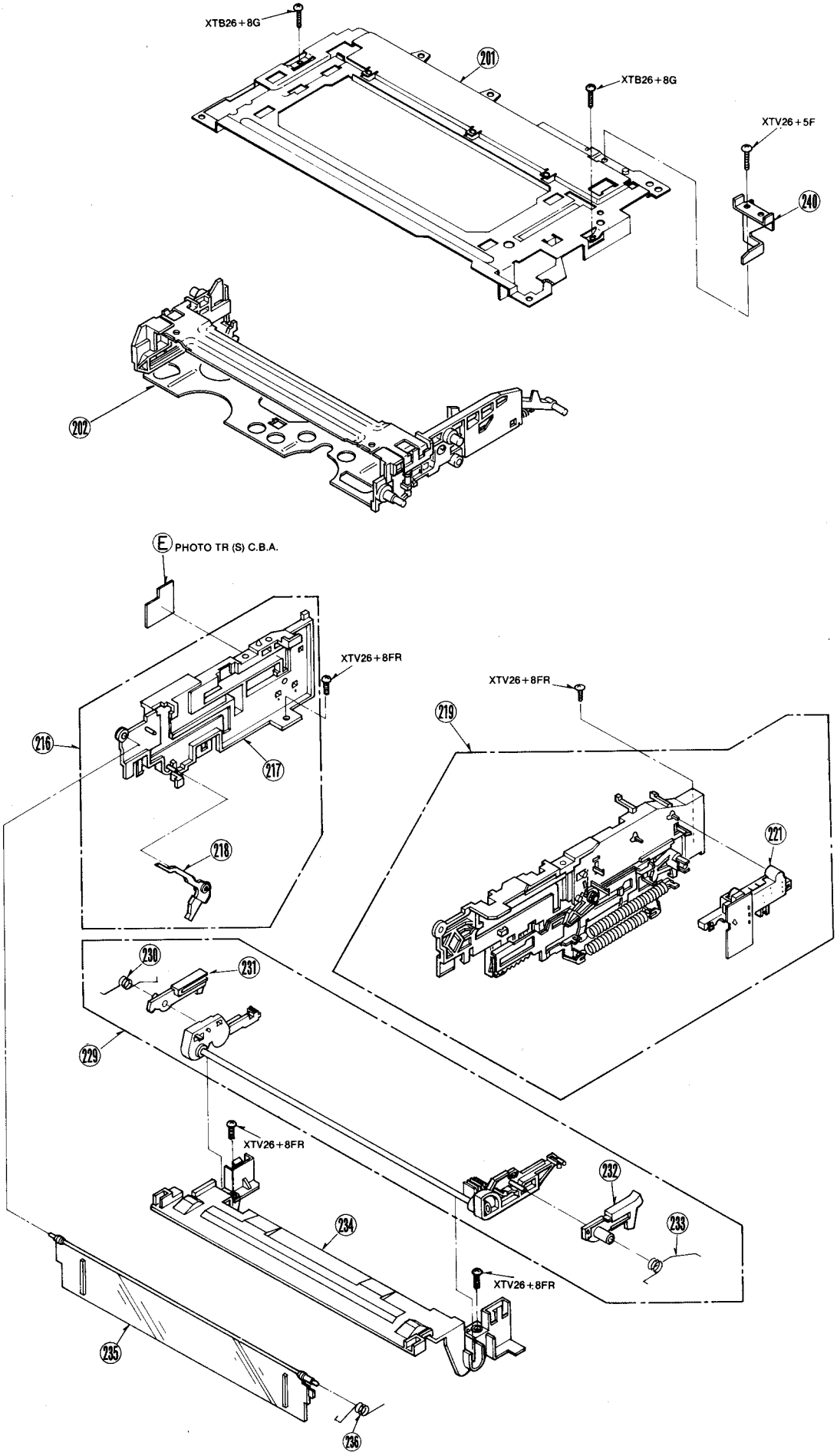

❹ CASING PARTS SECTION

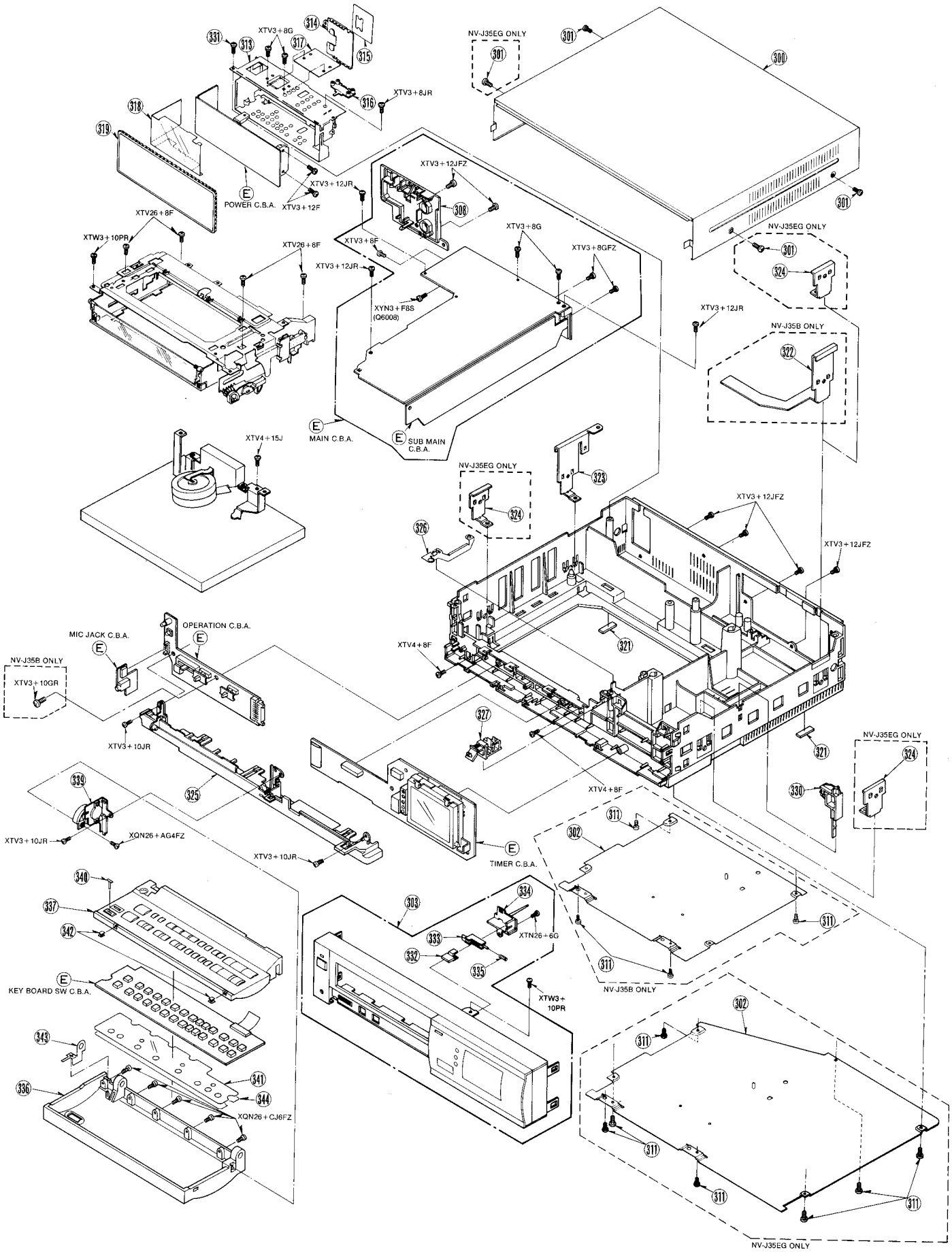

❺ PACKING PARTS SECTION

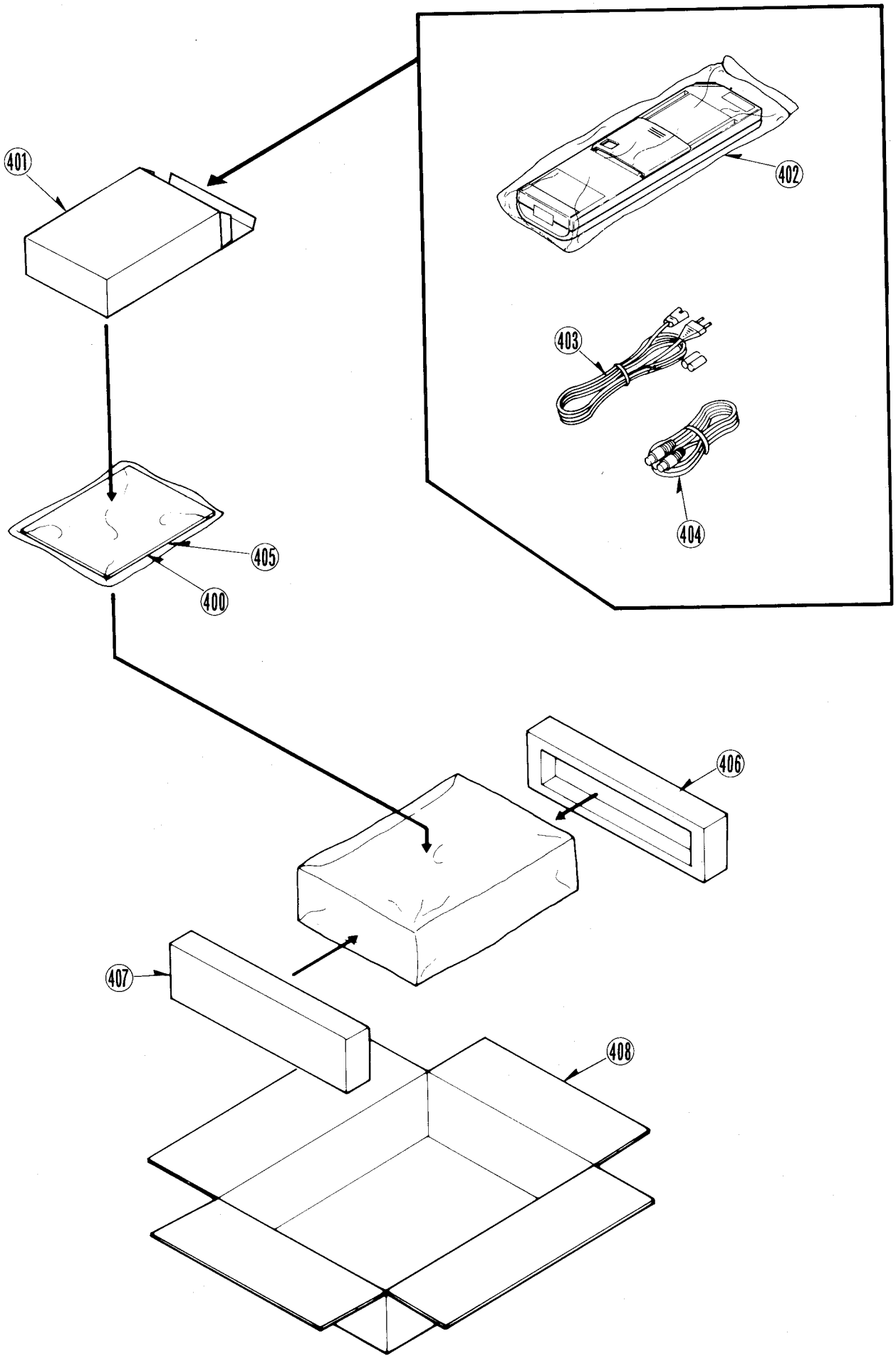

❻ REMOTE CONTROLLER (BUILD IN DIGITAL SCANNER) UNIT

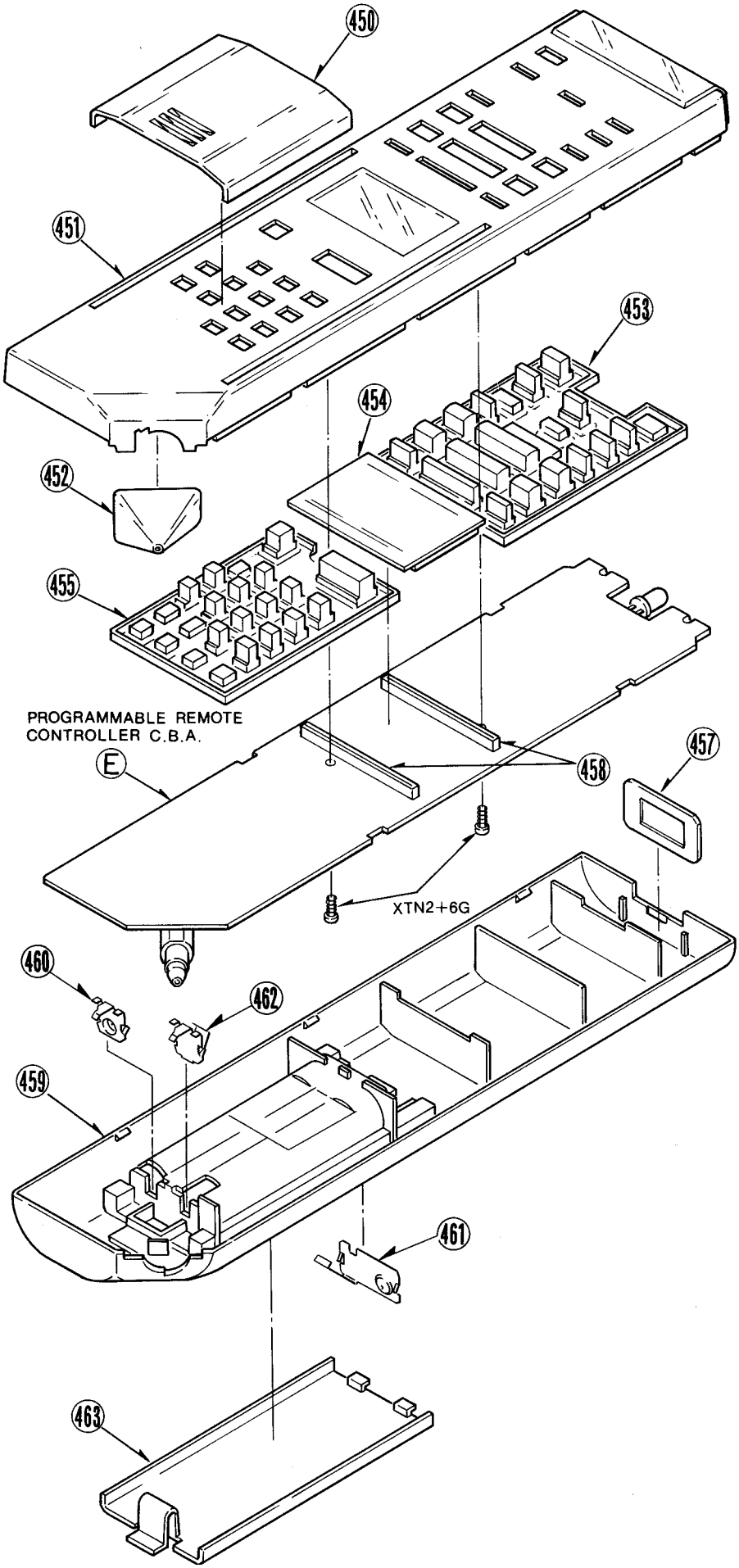

4-2. MECHANICAL REPLACEMENT PARTS LIST

Note:1.* Be sure to make your orders of replacement parts according to this list.
2.IMPORTANT SAFETY NOTICE
Components identified with the mark <!> have the special characteristics for safety. When replacing any of these components,use only the same type.

Ref.No.		Part No.	Part Name & Description	Pcs	Remarks
*********		NV-J35EG/B			
1(1)		VHD0141	HEAD AMP SET SCREW	2	
2(1)		VMA6897	HEAD AMP MOUNT ANGLE (L)	1	
3(1)		VMA6898	HEAD AMP MOUNT ANGLE (R)	1	
5(1)		VXS0082	EARTH PLATE UNIT	1	
6(1)		VEG0759	CYLINDER UNIT	1	<!>
7(1)		VEH0417	UPPER CYLINDER UNIT	1	<!>
8(1)		VJR0082	RT TERMINAL	1	
10(1)		VHD0425	UPPER CYLINDER SET SCREW	2	
11(1)		VXL1495	TENSION ARM (1) UNIT	1	
12(1)		VMB1563	TENSION SPRING	1	
13(1)		VXZ0267	TENSION BAND UNIT	1	
14(1)		VXR0185	SUPPLY REEL TABLE UNIT	1	
15(1)		VMX1171	REEL WASHER (0.5mm)	2	
15(1)		VMX1239	REEL WASHER (0.3mm)	2	
15(1)		VMX1238	REEL WASHER (0.2mm)	2	
16(1)		VXL1496	TENSION RELEASE ARM(A)UNIT	1	
17(1)		VBS0038	FE HEAD	1	
18(1)		VXA2705	TENSION ARM BASE (1) UNIT	1	
19(1)		VMA6895	MOUNT ANGLE (L)	1	
20(1)		VMX1079	CUT WASHER	2	
21(1)		VXL1497	TENSION RELEASE ARM(B)UNIT	1	
22(1)		VMB1582	TENSION RELEASE SPRING	1	
23(1)		VES0489	SAFETY SW	1	
24(1)		VXZ0259	SUPPLY MAIN BRAKE UNIT	1	
25(1)		VXZ0274	SUPPLY SOFT BRAKE(1)UNIT	1	
26(1)		VMB1564	SUPPLY SOFT BRAKE SPRING	1	
27(1)		VXZ0262	TAKE UP MAIN BRAKE UNIT	1	
28(1)		VXZ0221	TAKE UP SOFT BRAKE UNIT	1	
29(1)		VMB1561	TAKE UP SOFT BRAKE SPRING	1	
30(1)		VMA6896	MOUNT ANGLE (R)	1	
31(1)		VHD0322	ADJUST SCREW	1	
32(1)		VMB1251	ADJUST SPRING	1	
33(1)		VHD0089B	AZIMUTH ADJUST SCREW	1	
34(1)		VBR0132	A/C HEAD	1	
35(1)		VHN0063	M4 NYLON NUT	1	
36(1)		VHN0110	ADJUST NUT	1	
37(1)		VMA7831	HEAD BASE	1	
38(1)		VMB1567	A/C HEAD SPRING	1	
39(1)		VXL1857	SUB LOADING ARM (1) UNIT	1	
40(1)		VMB1566	SUB POST SPRING	1	
41(1)		VXQ0006	THRUST SCREW UNIT	1	
42(1)		VHD0317	HOUSING SCREW	2	
43(1)		VMX1033	OIL SEAL	2	
44(1)		VMX1353	PINCH CAM CAP	1	
45(1)		VXL1858	PRESSURE ROLLER UNIT	1	
46(1)		VMB1941	PIN PRESSURE SPRING	1	
47(1)		VML2232	PINCH PRESSURE ARM	1	
48(1)		VMB1569	PINCH PRESSURE ARM RELEASE	1	
			SPRING		
49(1)		VML1874	PINCH LIFT ARM	1	
50(1)		VDG0597	P5 PULL OUT SECTOR GEAR	1	
51(1)		VDG0421	PINCH CAM	1	
52(1)		VHD0045	M3 NYLON NUT	1	
53(1)		VXL1485	P5 UNIT	1	
54(1)		VMB1554	P5 SPRING	1	
55(1)		VSS0175	MODE SW	1	
57(1)		VXP0863	ROLLER POST UNIT	1	
58(1)		VXA2729	INCLIND BASE (S)(1)UNIT	1	
59(1)		VHD0133	ROLLER POST SCREW	2	
60(1)		VMD0910	POST STOPPER	2	
61(1)		VXP0764A	ROLLER POST UNIT	1	
62(1)		VXA3876	INCLIND BASE(T)(1)UNIT	1	
63(1)		VXA2687	INCLIND ADJUST PLATE UNIT	1	
64(1)		VDG0483	PINCH SPEED DOWN GEAR	1	
65(1)		VDG0332	CONNECTION GEAR	1	

Ref.No.		Part No.	Part Name & Description	Pcs	Remarks
66(1)		VXA3735	SOLENOID UNIT	1	
67(1)		VXA2692	KICK ROD UNIT	1	
68(1)		VML1849	SOLENOID LEVER (1) UNIT	1	
69(1)		VMB1553	KICK ROD SPRING	1	
70(1)		VMB1958	MAIN BRAKE SPRING	1	
71(1)		VXR0188	TAKE UP REEL TABLE UNIT	1	
72(1)		VXD0101	HOUSING UNIT	1	
76(1)		VHD0374	HOUSING SCREW	1	
77(1)		VHD0342	CYLINDER SCREW	3	
80(1)		VXA3520	LED HOLDER UNIT	1	
81(1)		VMA7844	REINFORCEMENT PLATE (F)	1	
82(1)		VMA7845	REINFORCEMENT PLATE (R)	1	
83(1)		VMB1733	LEAF SPRING	1	
84(1)		VMX1088	SUPPLY UPPER LIMITER	1	
85(1)		VDP1072	SUPPLY ROLLER	1	
86(1)		VMX1581	P1 COLLAR	1	
87(1)		VMX1533	SUPPLY ROLLER LIMITER	1	
88(1)		VMX1544	P4 UPPER LIMITER	1	
89(1)		VMX1568	P4 SLEEVE	1	
90(1)		VMX1534	P4 LOWER LIMITER	1	
100(2)		VMX1079	CUT WASHER	6	
101(2)		VMB1583	TAKE UP SOFT BRAKE RELEASE	1	
			ARM SPRING		
102(2)		VMB1560	MAIN LEVER SPRING	1	
103(2)		VXA3509	MAIN LEVER (1) UNIT	1	
104(2)		VMM0215	SUB LEVER	1	
105(2)		VXL1873	SS BRAKE ARM UNIT	1	
106(2)		VMB1588	SS BRAKE SPRING	1	
107(2)		VXA3512	SS BRAKE BASE (1) UNIT	1	
108(2)		VXA3516	TENSION ROLLER UNIT	1	
109(2)		VXL1632	CAM FOLLOWER ARM UNIT	1	
110(2)		VML1861	DETENT ARM	1	
111(2)		VDG0574	MAIN CAM GEAR	1	
112(2)		VDG0343	SUB CAM GEAR	1	
113(2)		VDG0348	CENTRE GEAR	1	
114(2)		VDG0422	RETAINER GEAR	1	
115(2)		VDG0345	PLANET GEAR	3	
116(2)		VDG0547	CLUTCH DISK	1	
117(2)		VMB1558	CLUTCH SPRING	1	
118(2)		VDG0350	LOCK SLIDE GEAR	1	
119(2)		VDG0335	DRIVE DISK	1	
120(2)		VDG0342	RING GEAR	1	
121(2)		VMX0967	CUT WASHER	2	
122(2)		VML1859	CHANGE LEVER	1	
123(2)		VXA2672	RELEASE LEVER (1) UNIT	1	
124(2)		VMB1557	RELEASE SPRING	1	
125(2)		VML1860	RELEASE LEVER	1	
127(2)		VXP1002	TAKE UP REEL GEAR UNIT	1	
128(2)		VDG0445	SUPPLY REEL GEAR	1	
129(2)		VML1858	RETURN LEVER (R)	1	
130(2)		VML1857	RETURN LEVER (L)	1	
131(2)		VMD0913	STOPPER BASE	1	
132(2)		VDV0169	TIMING BELT	1	
133(2)		VXP1113	ROTOR UNIT	1	
134(2)		VMA7941	ROTOR STOPPER	1	
135(2)		VEK4105	STATOR UNIT	1	<!>
136(2)		VMA6847	SUB PLATE	1	
137(2)		VXP0917	CENTRE PULLEY UNIT	1	
138(2)		VDG0564	LOADING GEAR (T)	1	
139(2)		VMB1555	LOADING SPRING (T)	1	
140(2)		VXL1489	LOADING ARM (T)(1) UNIT	1	
141(2)		VXA3515	SECTOR GEAR UNIT	1	
142(2)		VDG0448	LOADING CAM GEAR	1	
143(2)		VDG0419	LOADING GEAR (S)	1	
144(2)		VML1855	PLAY CONTROL ARM	1	
145(2)		VXL1487	LOADING ARM (S)(1) UNIT	1	
146(2)		VDG0546	INTERMEDIATE GEAR	1	
147(2)		VXL1861	PLAY ARM UNIT	1	
148(2)		VBK0048	FG HEAD	1	
149(2)		VMB1746	LOADING SPRING(S)	1	
161(2)		VHD0431	STATOR SPACER SCREW	1	
162(2)		VHN0102	STATOR NUT	1	
201(3)		VMA7223	TOP PLATE	1	
202(3)		VXA3832	CASSETTE HOLDER UNIT	1	
216(3)		VXA2676	SIDE PLATE (L) UNIT	1	

Ref.No.		Part No.	Part Name & Description	Pcs	Remarks
217(3)		VMD0917	SIDE PLATE (L)	1	
218(3)		VML1880	OPENER LEVER	1	
219(3)		VXA3895	SIDE PLATE (R) UNIT	1	
221(3)		VXA4642	SLIDE SW UNIT	1	
229(3)		VXP0987	MAIN SHAFT UNIT	1	
230(3)		VMB1836	SUB WIPER SPRING (L)	1	
231(3)		VML1878	SUB WIPER ARM (L)	1	
232(3)		VML1879	SUB WIPER ARM (R)	1	
233(3)		VMB1837	SUB WIPER SPRING (R)	1	
234(3)		VMA6900	CASSETTE GUIDE	1	
235(3)		VKF1212	BLINDER PANEL	1	
236(3)		VMB1258	BLINDER SPRING	1	
240(3)		VMA7224	CASSETTE HOLDER ANGLE	1	
300(4)		VYP3043	TOP PANEL UNIT	1	[SUPPLIED FROM M.B.V]
					NV-J35EG
300(4)		VGM0624	TOP PANEL	1	[SUPPLIED FROM M.B.V]
					NV-J35B
301(4)		VHD0304	TOP PANEL SCREW	4	NV-J35EG
301(4)		VHD0304	TOP PANEL SCREW	2	NV-J35B
302(4)		VKU0309	BOTTOM PLATE	1	[SUPPLIED FROM M.B.V]
					NV-J35EG
302(4)		VKU0245	BOTTOM PLATE	1	[SUPPLIED FROM M.B.V]
					NV-J35B
303(4)		VYP3150	FRONT PANEL UNIT	1	
308(4)		VEJ0840	ANT. TERMINAL PLATE	1	[SUPPLIED FROM M.B.V]
					NV-J35EG
308(4)		VEJ0839	ANT. TERMINAL PLATE	1	[SUPPLIED FROM M.B.V]
					NV-J35B
311(4)		VHD0059	BOTTOM PLATE SCREW	7	NV-J35EG
311(4)		VHD0059	BOTTOM PLATE SCREW	4	NV-J35B
313(4)		VXA3635	POWER SHIELD CASE(MAIN)UNIT	1	
314(4)		VSC2351	POWER SHIELD COVER (TOP)	1	
315(4)		VGH1476	NAME PLATE	1	
316(4)		VGQ1377	IC. HOLDER	1	
317(4)		VMZ1224	INSULATION SHEET	1	
318(4)		VMZ1140	SW BARRIER(A)	1	
319(4)		VSC2237	POWER SHIELD COVER(BOTTOM)	1	
321(4)		VKA0084	RUBBER FOOT	2	
322(4)		VMP1994	TOP HOLDER ANGLE (RR)	1	NV-J30B
323(4)		VMP1995	TOP HOLDER ANGLE (RL)	1	
324(4)		VMP1037	TOP HOLDER ANGLE (L)	3	NV-J30EG
325(4)		VYF1335	SUPPORT PANEL UNIT	1	
326(4)		VMA7949	EARTH ANGLE	1	
327(4)		VKC0327	TIMER HINGE (A)	1	
329(4)		VMC0460	EARTH SPRING	1	
330(4)		VJF0707	MAIN C.B.A. HOLDER	1	
331(4)		VHD0141	MAIN SCREW	1	
332(4)		VGU4497	DOOR OPEN BUTTON	1	
333(4)		VGU4498	DOOR LOCK LEVER	1	
334(4)		VGQ1675	LOCK LEVER HOLDER	1	
335(4)		VMB1963	LOCK LEVER SPRING	1	
336(4)		VYC0397	DOOR PANEL UNIT	1	NV-J35EG
336(4)		VYC0398	DOOR PANEL UNIT	1	NV-J35B
337(4)		VYP3147	KEY BOARD PANEL UNIT	1	NV-J35EG
337(4)		VYP3154	KEY BOARD PANEL UNIT	1	NV-J35B
339(4)		VXU0881	DOOR GEAR UNIT	1	
340(4)		VGL0455	PANEL LIGHT	1	
341(4)		VMZ1342	DOOR INSULATION SHEET	1	
342(4)		VMT0212	CUSHION RUBBER	2	
343(4)		VMC0524	DOOR EARTH SPRING	1	NV-J35EG
343(4)		VMC0459	DOOR EARTH SPRING	1	NV-J35B
344(4)		VMP2686	SUPPORT ANGLE	1	
400(5)		VQT3621	OPERATING INSTRUCTIONS	1	[SUPPLIED FROM M.B.V]
			(ENGLISH/GERMAN/FRENCH)		<!> NV-J35EG
400(5)		VQT3706	OPERATING INSTRUCTIONS	1	[SUPPLIED FROM M.B.V]
			(GREEK)		<!> NV-J35EG
400(5)		VQT3622	OPERATING INSTRUCTIONS	1	[SUPPLIED FROM M.B.V]
			(ENGLISH)		<!> NV-J35B
401(5)		VPK0825	ACCESSORIES BOX	1	[SUPPLIED FROM M.B.V]
402(5)		VEQ1120	REMOTE CONTROL UNIT	1	NV-J35EG
			(BUILD IN DIGITAL SCANNER)		
402(5)		VEQ1119	REMOTE CONTROL UNIT	1	NV-J35B
			(BUILD IN DIGITAL SCANNER)		
403(5)		VJA0449	AC POWER CORD	1	<!> NV-J35EG

Ref.No.		Part No.	Part Name & Description	Pcs	Remarks
403(5)		VJA0568	AC POWER CORD	1	<!> NV-J35B
404(5)		VJA0376	DIN RF CABLE	1	
405(5)		VQC1315	PROGRAMME SHEET	1	NV-J35EG
405(5)		VQC1330	PROGRAMME SHEET	1	NV-J35B
406(5)		VPN2822	CUSHION (R)	1	[SUPPLIED FROM M.B.V]
407(5)		VPN2823	CUSHION (L)	1	[SUPPLIED FROM M.B.V]
408(5)		VPG5377	PACKING	1	[SUPPLIED FROM M.B.V]
					NV-J35EG
408(5)		VPG5379	PACKING	1	[SUPPLIED FROM M.B.V]
					NV-J35B
450(6)		VKF1445	SLIDING LID	1	
451(6)		VYK3066	TOP COVER UNIT	1	NV-J35EG
451(6)		VYK3065	TOP COVER UNIT	1	NV-J35B
452(6)		VGQ1640	SENSOR CAP	1	
453(6)		VSP0507	RUBBER CONTACT (A)	1	
454(6)		VSL0200	LCD	1	
455(6)		VSP0508	RUBBER CONTACT (B)	1	
457(6)		VKW0878	IR WINDOW	1	
458(6)		VMT0297	BASE RUBBER(LCD)	2	
459(6)		VKM2169	BOTTOM COVER	1	
460(6)		VJR0585	ELECTRODE(+)	1	
461(6)		VJR0498	ELECTRODE(COM.)	1	
462(6)		VJR0584	ELECTRODE(-)	1	
463(6)		VKF1455	BATTERY COVER	1	
			SERVICING FIXTURES & TOOLS		
		VFJ8125H3F	VHS ALIGNMENT TAPE	1	
		VFK0335	RETAINING RING REMOVER	1	(3mm/4mm)
		VFK0387	TENSION POST ADJUSTMENT	1	
			PLATE		
		VFK0191	POST ADJUSTMENT PLATE	1	
		VFK0190	REEL TABLE HEIGHT GAUGE	1	
		VFK0328	H-POSITION ADJUSTMENT	1	
			SCREWDRIVER		
		VFK0329	POST ADJUSTMENT SCREWDRIVER	1	
		VFK62	FAN TYPE TENSION GAUGE	1	
		VFK0326	HEX WRENCH SET	1	
		VFK0132	BACK TENSION METER	1	
		VFK0343	CHECK LIGHT	1	
		VFK0344	HEIGHT ADJUSTMENT JIG	1	
		VFK27	HEAD CLEANING STICK	1	
		MOR265	MORLYTONE GREASE	1	
		VFK0341	UPPER CYLINDER REMOVER	1	

4-3. ELECTRICAL REPLACEMENT PARTS LIST

Note: 1.* Be sure to make your orders of replacement parts according to this list.
2. IMPORTANT SAFETY NOTICE
Components identified with the mark <!> have the special characteristics for safety. When replacing any of these components, use only the same type.
3. Unless otherwise specified,
All resistors are in OHMS, K=1,000 OHMS. All capacitors are in MICROFARADS(uf), P=uuF.
4. The P.C.Board units marked width'▌'show below the main assembled parts.
5. Printed circuit board assembly with mark(NLA) is no longer available after discontinuation of the product.

Ref.No.		Part No.	Part Name & Description	Pcs	Remarks
**********		NV-J35EG/B			
		VEP03764AB	MAIN C.B.A.	1	[SUPPLIED FROM M.B.V]
					<!> (NLA) NV-J35EG
					INCLUDING THE
					SUB MAIN C.B.A.
					(VEP03765AB),
					SECAM PACK C.B.A.
					(VEP03452F),
					INPUT/OUTPUT C.B.A.
					(VEP03594B),
					TV DEMODULATOR C.B.A.
					(VEP07596C),
					CYLINDER DRIVE C.B.A.
					(VEP02329A),
					VPS C.B.A.
					(VEP07538D),
					OSC C.B.A.
					(VEP06583B).
		VEP03764AA	MAIN C.B.A.	1	[SUPPLIED FROM M.B.V]
					<!> (NLA) NV-J35B
					INCLUDING THE
					SUB MAIN C.B.A.
					(VEP03765AA),
					INPUT/OUTPUT C.B.A.
					(VEP03594AD),
					TV DEMODULATOR C.B.A.
					(VEP07592B),
					CYLINDER DRIVE C.B.A.
					(VEP02329A),
					OSC C.B.A.
					(VEP06583B).
		VEP03765AB	SUB MAIN C.B.A.	1	[SUPPLIED FROM M.B.V]
					(NLA) NV-J35EG
					INCLUDING THE
					SECAM PACK C.B.A.
					(VEP03452F).
					INCLUDED IN MAIN
					C.B.A.(VEP03764AB).
		VEP03765AA	SUB MAIN C.B.A.	1	[SUPPLIED FROM M.B.V]
					(NLA) NV-J35B
					INCLUDED IN MAIN
					C.B.A.(VEP03764AA).
		VEP03452F	SECAM PACK C.B.A.	1	[SUPPLIED FROM M.B.V]
					(NLA) NV-J35EG
					INCLUDED IN SUB MAIN
					C.B.A.(VEP03765AB).
		VEP03594B	INPUT/OUTPUT C.B.A.	1	[SUPPLIED FROM M.B.V]
					(NLA) NV-J35EG
					INCLUDED IN MAIN
					C.B.A.(VEP03764AB).
		VEP03594AD	INPUT/OUTPUT C.B.A.	1	[SUPPLIED FROM M.B.V]
					(NLA) NV-J35B
					INCLUDED IN MAIN
					C.B.A.(VEP03764AA).
		VEP07596C	TV DEMODULATOR C.B.A.	1	[SUPPLIED FROM M.B.V]
					(NLA) NV-J35EG
					INCLUDED IN MAIN
					C.B.A.(VEP03764AB).
		VEP07592B	TV DEMODULATOR C.B.A.	1	[SUPPLIED FROM M.B.V]
					(NLA) NV-J35B
					INCLUDED IN MAIN
					C.B.A.(VEP03764AA).
		VEP02329A	CYLINDER DRIVE C.B.A.	1	[SUPPLIED FROM M.B.V]
					(NLA)
					INCLUDED IN MAIN
					C.B.A.(VEP03764AB/
					VEP03764AA).
		VEP07538D	VPS C.B.A.	1	[SUPPLIED FROM M.B.V]
					(NLA) NV-J35EG
					INCLUDED IN MAIN
					C.B.A.(VEP03764AB).
		VEP06583B	OSC C.B.A.	1	[SUPPLIED FROM M.B.V]
					(NLA)
					INCLUDED IN MAIN
					C.B.A.(VEP03764AB/
					VEP03764AA).
		VEP07598B	TIMER C.B.A.	1	[SUPPLIED FROM M.B.V]
					(NLA) NV-J35EG
					INCLUDING THE
					IR RECEIVER C.B.A.
					(VEP06552A)
		VEP07598A	TIMER C.B.A.	1	[SUPPLIED FROM M.B.V]
					(NLA) NV-J35B
					INCLUDING THE
					IR RECEIVER C.B.A.
					(VEP06552A)
		VEP06552A	IR RECEIVER C.B.A.	1	[SUPPLIED FROM M.B.V]
					(NLA)
					INCLUDED IN TIMER
					C.B.A.(VEP07598B/
					VEP07598A).
		VEP01420AB	POWER C.B.A.	1	[SUPPLIED FROM M.B.V]
					<!> (NLA) NV-J35EG
		VEP01420AA	POWER C.B.A.	1	[SUPPLIED FROM M.B.V]
					<!> (NLA) NV-J35B
		VEP05137D	HEAD AMP C.B.A.	1	(NLA) NV-J35EG
		VEP05137A	HEAD AMP C.B.A.	1	(NLA) NV-J35B
		VEP06681A	POWER SW C.B.A.	1	[SUPPLIED FROM M.B.V]
					(NLA)
		VEP00P95A	MIC JACK C.B.A.	1	[SUPPLIED FROM M.B.V]
					(NLA)
		VEP06569AC	KEY BOARD SW C.B.A.	1	
					(NLA) NV-J35EG
		VEP06569D	KEY BOARD SW C.B.A.	1	
					(NLA) NV-J35B
		VEP66125E	REMOTE CONTROL UNIT C.B.A.	1	(NLA) NV-J35EG
		VEP66125D	REMOTE CONTROL UNIT C.B.A.	1	(NLA) NV-J35B
		VXA3554	MECHANISM CONNECTION C.B.A.	1	(NLA)

Ref.No.		Part No.	Part Name & Description	Pcs	Remarks
		VEK3578	SUPPLY PHOTO TR. C.B.A.	1	(NIA)
			TAKE-UP PHOTO TR. C.B.A.	1	(NIA)
		ENC17976	RF CONVERTER	1	[SUPPLIED FROM M.B.V]
					<!> (NIA) NV-J35EG
					OR VEQ1043
		ENC17972A	RF CONVERTER	1	[SUPPLIED FROM M.B.V]
					<!> (NIA) NV-J35B
		ENV57850H6	TUNER	1	[SUPPLIED FROM M.B.V]
					<!> (NIA) NV-J35EG
		ENV87837H3	TUNER	1	[SUPPLIED FROM M.B.V]
					<!> (NIA) NV-J35B
	■	VEP03764AB	MAIN C.B.A.		[SUPPLIED FROM M.B.V]
					<!> (NIA) NV-J35EG
			CAPACITORS		
C301		ECEA1EKN2R2	E.CAPACITOR 25V 2.2U	1	
C302		ECEA0JK220	E.CAPACITOR 6.3V 22U	1	
C303		ECUM1E104ZFN	C.CAPACITOR CH 25V 0.1U	1	
C304		ECEA0JU331	E.CAPACITOR 6.3V 330U	1	
C305		ECEA1CK100	E.CAPACITOR 16V 10U	1	
C306		ECEA1EK4R7	E.CAPACITOR 25V 4.7U	1	
C307		ECUM1H470JCN	C.CAPACITOR CH 50V 47P	1	
C308		ECUM1H220JCN	C.CAPACITOR CH 50V 22P	1	
C310		ECEA1CK100	E.CAPACITOR 16V 10U	1	
C311,12		ECUM1H180JCN	C.CAPACITOR CH 50V 18P	2	
C313		ECEA1CK100	E.CAPACITOR 16V 10U	1	
C314		ECUM1H121JCN	C.CAPACITOR CH 50V 120P	1	
C315		ECUM1H560JCN	C.CAPACITOR CH 50V 56P	1	
C317		ECEA1AK470	E.CAPACITOR 10V 47U	1	
C319		ECUM1H471KBN	C.CAPACITOR CH 50V 470P	1	
C320		ECUM1H270JCN	C.CAPACITOR CH 50V 27P	1	
C321		ECEA1HK010	E.CAPACITOR 50V 1U	1	
C322		ECEA1HK2R2	E.CAPACITOR 50V 2.2U	1	
C324		ECEA1CK100	E.CAPACITOR 16V 10U	1	
C325,26		ECUM1H103ZFN	C.CAPACITOR CH 50V 0.01U	2	
C327,28		ECEA1CK100	E.CAPACITOR 16V 10U	2	
C329		ECUM1H103ZFN	C.CAPACITOR CH 50V 0.01U	1	
C331		ECUM1H103ZFN	C.CAPACITOR CH 50V 0.01U	1	
C332		ECQV1H334JZ	P.CAPACITOR 50V 0.33U	1	
C333		ECEA1HK4R7	E.CAPACITOR 50V 4.7U	1	
C334		ECUM1H103ZFN	C.CAPACITOR CH 50V 0.01U	1	
C335		ECUM1H680JCN	C.CAPACITOR CH 50V 68P	1	
C336		ECUM1H101JCN	C.CAPACITOR CH 50V 100P	1	
C337		ECUM1H270JCN	C.CAPACITOR CH 50V 27P	1	
C338		ECUM1E104ZFN	C.CAPACITOR CH 25V 0.1U	1	
C339		ECUM1H220JCN	C.CAPACITOR CH 50V 22P	1	
C340		ECEA1EK4R7	E.CAPACITOR 25V 4.7U	1	
C349		ECUM1H470JCN	C.CAPACITOR CH 50V 47P	1	
C351		ECUM1H220JCN	C.CAPACITOR CH 50V 22P	1	
C352		ECQB1H562JH	P.CAPACITOR 50V 5600P	1	
C353		ECUM1H560JCN	C.CAPACITOR CH 50V 56P	1	
C354		ECEA1CK100	E.CAPACITOR 16V 10U	1	
C360		ECUM1H153ZFN	C.CAPACITOR CH 50V 0.015U	1	
C701		ECEA1EK4R7	E.CAPACITOR 25V 4.7U	1	
C702		ECEA1CKS100	E.CAPACITOR 16V 10U	1	
C703		ECEA1HK2R2	E.CAPACITOR 50V 2.2U	1	
C707		ECEA1HK0R1	E.CAPACITOR 50V 0.1U	1	
C708		ECEA1CKS100	E.CAPACITOR 16V 10U	1	
C710		ECUM1H103ZFN	C.CAPACITOR CH 50V 0.01U	1	
C715-20		ECUM1H103ZFN	C.CAPACITOR CH 50V 0.01U	6	
C721		ECEA1HKR27K	E.CAPACITOR 50V 0.27U	1	
C722		ECUM1H103ZFN	C.CAPACITOR CH 50V 0.01U	1	
C723		ECUM1H180JCN	C.CAPACITOR CH 50V 18P	1	

Ref.No.		Part No.	Part Name & Description	Pcs	Remarks
C725		ECQV1H104JZ	P.CAPACITOR 50V 0.1U	1	
C727		ECUM1H080DCN	C.CAPACITOR CH 50V 80P	1	
C728		ECUM1H103ZFN	C.CAPACITOR CH 50V 0.01U	1	
C730		ECEA1CK100	E.CAPACITOR 16V 10U	1	
C731		ECEA1CKS100	E.CAPACITOR 16V 10U	1	
C732		ECQV1H224BO	P.CAPACITOR 50V 0.22U	1	
C734		ECUM1H103ZFN	C.CAPACITOR CH 50V 0.01U	1	
C735		ECUM1H070DCN	C.CAPACITOR CH 50V 7P	1	
C736		ECQB1H103JH	P.CAPACITOR 50V 0.01U	1	
C737		ECUM1H151JCN	C.CAPACITOR CH 50V 150P	1	
C739		ECEA1HK010	E.CAPACITOR 50V 1U	1	
C740		ECUM1H103ZFN	C.CAPACITOR CH 50V 0.01U	1	
C741		ECEA1CK100	E.CAPACITOR 16V 10U	1	
C742		ECUN1H030CCN	C.CAPACITOR CH 50V 3P	1	
C743		ECUM1H270RSN	C.CAPACITOR CH 50V 27P	1	
C744		ECEA1HKR47	E.CAPACITOR 50V 0.47U	1	
C745		ECUX1H680JCN	C.CAPACITOR CH 50V 68P	1	
C748		ECEA1CK470	E.CAPACITOR 16V 47U	1	
C749		ECEA1CK100	E.CAPACITOR 16V 10U	1	
C760		ECQV1H473JZ	P.CAPACITOR 50V 0.047U	1	
C775		ECUM1H120JCN	C.CAPACITOR CH 50V 12P	1	
C781		ECUM1H220JCN	C.CAPACITOR CH 50V 22P	1	
C782		ECUM1H060DCN	C.CAPACITOR CH 50V 6P	1	
C790		ECUM1H103ZFN	C.CAPACITOR CH 50V 0.01U	1	
C797,98		ECUM1H103ZFN	C.CAPACITOR CH 50V 0.01U	2	
C814		ECEA1AK101	E.CAPACITOR 10V 100U	1	
C815		ECQV1H154JZ	P.CAPACITOR 50V 0.15U	1	
C816		ECUM1E104ZFN	C.CAPACITOR CH 25V 0.1U	1	
C817		ECQV1H124JZ	P.CAPACITOR 50V 0.12U	1	
C818		ECUM1H471KBN	C.CAPACITOR CH 50V 470P	1	
C819		ECUM1H820JCN	C.CAPACITOR CH 50V 82P	1	
C820		ECEA1HK2R2	E.CAPACITOR 50V 2.2U	1	
C821		ECEA1HFS4R7	E.CAPACITOR 50V 4.7U	1	
C823		ECEA1HK2R2	E.CAPACITOR 50V 2.2U	1	
C824		ECEA1HK010	E.CAPACITOR 50V 1U	1	
C825		ECUM1H101JCN	C.CAPACITOR CH 50V 100P	1	
C826		ECEA1AU221	E.CAPACITOR 10V 220U	1	
C827		ECUM1H050DCN	C.CAPACITOR CH 50V 5P	1	
C828		ECUM1H102KBN	C.CAPACITOR CH 50V 1000P	1	
C829		ECQV1H474JZ	P.CAPACITOR 50V 0.47U	1	
C830		ECEA1EK4R7	E.CAPACITOR 25V 4.7U	1	
C831,32		ECUM1E104ZFN	C.CAPACITOR CH 25V 0.1U	2	
C833		ECUM1H471KBN	C.CAPACITOR CH 50V 470P	1	
C839		ECUM1H103ZFN	C.CAPACITOR CH 50V 0.01U	1	
C840		ECEA1CK470	E.CAPACITOR 16V 47U	1	
C841-49		ECUM1H103ZFN	C.CAPACITOR CH 50V 0.01U	9	
C851		ECKF1H103ZF	C.CAPACITOR 50V 0.01U	1	
C852		ECEA1CK330	E.CAPACITOR 16V 33U	1	
C853		ECEA10Z47	E.CAPACITOR 10V 47U	1	
C854		ECQV1H563JZ	P.CAPACITOR 50V 0.056U	1	
C855		ECEA1CK330	E.CAPACITOR 16V 33U	1	
C856		ECKF1H103ZF	C.CAPACITOR 50V 0.01U	1	
C858		ECKF1H681KB	C.CAPACITOR 50V 680P	1	
C859		ECCF1H470JC	C.CAPACITOR 50V 47P	1	
C1001		ECEA1CK470	E.CAPACITOR 25V 47U	1	
C1003		ECEA0JK101U	E.CAPACITOR 6.3V 100U	1	
C1004		ECEA1CK470	E.CAPACITOR 16V 47U	1	
C2001		ECEA0JK221	E.CAPACITOR 6.3V 220U	1	
C2002		ECUM1H104ZFN	C.CAPACITOR CH 50V 0.1U	1	
C2003		ECQB1H472JZ	P.CAPACITOR 50V 4700P	1	
C2004		ECUM1H103ZFN	C.CAPACITOR CH 50V 0.01U	1	
C2005		ECQB1H103JZ	P.CAPACITOR 50V 0.01U	1	
C2006		ECEA0JK470	E.CAPACITOR 6.3V 47U	1	
C2007		ECUM1H472KBN	C.CAPACITOR CH 50V 4700P	1	
C2008		ECEA1HKN010	E.CAPACITOR 50V 1U	1	
C2009		ECEA1CKN4R7	E.CAPACITOR 16V 4.7U	1	
C2010		ECEA1HKR47	E.CAPACITOR 50V 0.47U	1	
C2011		ECUM1H562KBN	C.CAPACITOR CH 50V 5600P	1	
C2012		VCYD1E473KR	S.CAPACITOR 25V 0.047U	1	
C2013		ECEA1HK4R7	E.CAPACITOR 50V 4.7U	1	
C2014		ECEA0JK221	E.CAPACITOR 6.3V 220U	1	
C2015		ECEA0JK101U	E.CAPACITOR 6.3V 100U	1	
C2016		ECQB1H103JZ	P.CAPACITOR 50V 0.01U	1	
C2017		ECEA0JK221	E.CAPACITOR 6.3V 220U	1	
C2018		ECEA1CK100	E.CAPACITOR 16V 10U	1	

Ref.No.		Part No.	Part Name & Description	Pcs	Remarks
C2019		ECEA1HKN2R2	E.CAPACITOR 50V 2.2U	1	
C2020		VCYD1E473KR	S.CAPACITOR 25V 0.047U	1	
C2022		ECEA1HKN2R2	E.CAPACITOR 50V 2.2U	1	
C2024		ECQV1H104JZ	P.CAPACITOR 50V 0.1U	1	
C2025		ECQV1H683JZ	P.CAPACITOR 50V 0.068U	1	
C2026		ECQV1H224JZ	P.CAPACITOR 50V 0.22U	1	
C2027		ECEA1HKR47	E.CAPACITOR 50V 0.47U	1	
C2028		ECQB1H333JZ	P.CAPACITOR 50V 0.033U	1	
C2029		ECEA0JK470	E.CAPACITOR 6.3V 47U	1	
C2030		ECEA1CK100	E.CAPACITOR 16V 10U	1	
C2031		ECQV1H104JZ	P.CAPACITOR 50V 0.1U	1	
C2032		ECEA1HKN010	E.CAPACITOR 50V 1U	1	
C2033		ECUM1H103ZFN	C.CAPACITOR CH 50V 0.01U	1	
C2034		ECEA0JK330	E.CAPACITOR 6.3V 33U	1	
C2050		ECEA0JK221	E.CAPACITOR 6.3V 220U	1	
C2101-03		ECQB1H333JZ	P.CAPACITOR 50V 0.033U	3	
C2104-06		ECEA1HK2R2	E.CAPACITOR 50V 2.2U	3	
C2107,08		VCYD1E333KR	S.CAPACITOR 25V 0.033U	2	
C2111		ECEA1CK101	E.CAPACITOR 16V 100U	1	
C2115		ECEA1CK470	E.CAPACITOR 16V 47U	1	
C2116		ECEA1EU221	E.CAPACITOR 25V 220U	1	
C2118		VCYD1E333KR	S.CAPACITOR 25V 0.033U	1	
C2121		ECQV1H184JZ	P.CAPACITOR 50V 0.18U	1	
C2201		ECEA1CK100	E.CAPACITOR 16V 10U	1	
C2203		ECQV1H104JZ	P.CAPACITOR 50V 0.1U	1	
C2204-06		ECEA1HK0R1	E.CAPACITOR 50V 0.1U	3	
C2207		ECQV1H104JZ	P.CAPACITOR 50V 0.1U	1	
C2208-10		ECEA1VKN4R7	E.CAPACITOR 35V 4.7U	3	
C2211		ECQB1H473JH	P.CAPACITOR 50V 0.047U	1	
C2212		ECEA0JK101U	E.CAPACITOR 6.3V 100U	1	
C2213		ECEA1CK100	E.CAPACITOR 16V 10U	1	
C2301		ECEA1CK100	E.CAPACITOR 16V 10U	1	
C2302		VCYD1E473KR	S.CAPACITOR 25V 0.047U	1	
C2303		ECUM1H562KBN	C.CAPACITOR CH 50V 5600P	1	
C2304		ECEA1HKR47	E.CAPACITOR 50V 0.47U	1	
C2305		ECEA1HKN010	E.CAPACITOR 50V 1U	1	
C2501		ECEA1CK100	E.CAPACITOR 16V 10U	1	
C2502		ECUM1H220JCN	C.CAPACITOR CH 50V 22P	1	
C2504		ECEA1HKN010	E.CAPACITOR 50V 1U	1	
C2505		ECEA0JK470	E.CAPACITOR 6.3V 47U	1	
C2506		ECEA1HK010	E.CAPACITOR 50V 1U	1	
C2507		ECQB1H103JZ	P.CAPACITOR 50V 0.01U	1	
C2508		ECEA0JK470	E.CAPACITOR 6.3V 47U	1	
C2509		ECUM1H181JCN	C.CAPACITOR CH 50V 180P	1	
C3001		ECEA1CK470	E.CAPACITOR 16V 47U	1	
C3002		ECEA0JU471	E.CAPACITOR 6.3V 470U	1	
C3003,04		ECUM1H103ZFN	C.CAPACITOR CH 50V 0.01U	2	
C3010		ECUM1H151JCN	C.CAPACITOR CH 50V 150P	1	
C3011		ECUM1H330JCN	C.CAPACITOR CH 50V 33P	1	
C3012		ECUM1H681KBN	C.CAPACITOR CH 50V 680P	1	
C3013		ECEA1HKN010	E.CAPACITOR 50V 1U	1	
C3014		ECUM1H330JCN	C.CAPACITOR CH 50V 33P	1	
C3015		VCYD1E103KR	S.CAPACITOR 25V 0.01U	1	
C3016		ECEA0JK470	E.CAPACITOR 6.3V 47U	1	
C3019		ECUM1H220JCN	C.CAPACITOR CH 50V 22P	1	
C3053		ECEA0JK101U	E.CAPACITOR 6.3V 100U	1	
C3064		ECQB1H103JZ	P.CAPACITOR 50V 0.01U	1	
C3065		ECUM1H103ZFN	C.CAPACITOR CH 50V 0.01U	1	
C3067,68		ECUM1H103ZFN	C.CAPACITOR CH 50V 0.01U	2	
C3070		ECUM1H103ZFN	C.CAPACITOR CH 50V 0.01U	1	
C3071		ECUM1H102KBN	C.CAPACITOR CH 50V 1000P	1	
C3072		ECUM1H101JCN	C.CAPACITOR CH 50V 100P	1	
C3076		ECUM1H180JCN	C.CAPACITOR CH 50V 18P	1	
C3081		ECEA1CK220	E.CAPACITOR 16V 22U	1	
C3101		ECEA0JK470	E.CAPACITOR 6.3V 47U	1	
C3102		ECEA1CK470	E.CAPACITOR 16V 47U	1	
C3103,04		ECUM1H332KBN	C.CAPACITOR CH 50V 3300P	2	
C3105		ECEA1CK100	E.CAPACITOR 16V 10U	1	
C3808		ECUM1H332KBN	C.CAPACITOR CH 50V 3300P	1	
C3809		ECQB1H332JZ	P.CAPACITOR 50V 0.27U	1	
C3810		ECEA1HK010	E.CAPACITOR 50V 1U	1	
C3811		ECUM1H103ZFN	C.CAPACITOR CH 50V 0.01U	1	
C3812		ECUN1H821KBN	C.CAPACITOR CH 50V 820U	1	
C3813		ECUM1H103ZFN	C.CAPACITOR CH 50V 0.01U	1	
C3814		ECEA0JK101U	E.CAPACITOR 6.3V 100U	1	

Ref.No.		Part No.	Part Name & Description	Pcs	Remarks
C3815,16		ECUM1H103ZFN	C.CAPACITOR CH 50V 0.01U	2	
C3817		ECUM1H470JCN	C.CAPACITOR CH 50V 47P	1	
C3818,19		ECUM1H103ZFN	C.CAPACITOR CH 50V 0.01U	2	
C3820		ECUM1H560JCN	C.CAPACITOR CH 50V 56P	1	
C3821		ECUM1H103ZFN	C.CAPACITOR CH 50V 0.01U	1	
C3822		ECUM1H560JCN	C.CAPACITOR CH 50V 56P	1	
C3901,02		ECEA1CK330	E.CAPACITOR 16V 33U	2	
C3903		ECEA1HK010	E.CAPACITOR 50V 1U	1	
C3904-06		ECEA1CK470	E.CAPACITOR 16V 47U	3	
C3907,08		ECEA1HK2R2	E.CAPACITOR 50V 2.2U	2	
C3909		ECEA1HKR47	E.CAPACITOR 50V 0.47U	1	
C3913		ECUM1H103KBN	C.CAPACITOR CH 50V 0.01U	1	
C3914		ECUM1H222KBN	C.CAPACITOR CH 50V 2200P	1	
C3916		ECUX1H471KBN	C.CAPACITOR CH 50V 470P	1	
C4001		ECQB1H103JZ	P.CAPACITOR 50V 0.01U	1	
C4002		ECEA16M33	E.CAPACITOR 16V 33U	1	
C4003		ECKF1H102ZF	C.CAPACITOR 50V 1000P	1	
C4004		ECQP1222JZ	P.CAPACITOR 0.0022U	1	
C4005		ECCD2H121K	C.CAPACITOR 500V 120P	1	
C4006		ECEA1CK470	E.CAPACITOR 16V 47U	1	
C4007		ECEA1CK330	E.CAPACITOR 16V 33U	1	
C4008		ECEA1HK010	E.CAPACITOR 50V 1U	1	
C4009		ECEA1EK4R7	E.CAPACITOR 25V 4.7U	1	
C4012		ECEA1CK100	E.CAPACITOR 16V 10U	1	
C4013		ECUM1H681JN	C.CAPACITOR CH 50V 680P	1	
C4015		ECEA16M10R	E.CAPACITOR 16V 10.U	1	
C4016		ECUM1H102KBN	C.CAPACITOR CH 50V 1000P	1	
C4017		ECEA10M47	E.CAPACITOR 10V 47U	1	
C4018		ECQB1H822JZ	P.CAPACITOR 50V 8200P	1	
C4020		ECUM1H102KBN	C.CAPACITOR CH 50V 1000P	1	
C4021		ECEA1AK101	E.CAPACITOR 10V 100U	1	
C4022		ECUM1H102KBN	C.CAPACITOR CH 50V 1000P	1	
C4023		ECUN1H221JCN	C.CAPACITOR CH 50V 220P	1	
C4024,25		ECUM1H101JCN	C.CAPACITOR CH 50V 100P	2	
C4026		ECUM1H104ZFN	C.CAPACITOR CH 50V 0.1U	1	
C4029		ECQB1H123JZ	P.CAPACITOR 50V 0.012U	1	
C4032		ECEA1CK470	E.CAPACITOR 16V 47U	1	
C4034		ECUM1H681KBN	C.CAPACITOR CH 50V 680P	1	
C6001,02		ECEA0JK470	E.CAPACITOR 6.3V 47U	2	
C6005		ECEA1CK330	E.CAPACITOR 16V 33U	1	
C6006		ECEA0JK330	E.CAPACITOR 6.3V 33U	1	
C6007		VCYD1C104MR1	S.CAPACITOR 16V 0.1U	1	
C6008		ECUM1H103ZFN	C.CAPACITOR CH 50V 0.01U	1	
C6010		ECUM1H332KBN	C.CAPACITOR CH 50V 3300P	1	
C6011,12		ECUM1H271JCN	C.CAPACITOR CH 50V 270P	2	
C6013		ECKF1H103ZF	C.CAPACITOR 50V 0.01U	1	
C6014		ECEA1CK220	E.CAPACITOR 16V 22U	1	
C6015		ECEA1CK330	E.CAPACITOR 16V 33U	1	
C6025		ECUM1H103ZFN	C.CAPACITOR CH 50V 0.01U	1	
C6101		ECUM1H103ZFN	C.CAPACITOR CH 50V 0.01U	1	
C6102		ECQV1H104JZ	P.CAPACITOR 50V 0.1U	1	
C6103		ECEA0JK470	E.CAPACITOR 6.3V 47U	1	
C6104		ECUM1H181JCN	C.CAPACITOR CH 50V 180P	1	
C6105		ECUM1H101JCN	C.CAPACITOR CH 50V 100P	1	
C6106		ECUM1H150JCN	C.CAPACITOR CH 50V 15P	1	
C6201		ECUM1E563KBX	C.CAPACITOR CH 25V 0.056U	1	
C6801		ECEA1CK100	E.CAPACITOR 16V 10U	1	
C7401		ECEA0JU221	E.CAPACITOR 6.3V 220U	1	
C7402		EECS5R5V473	E.CAPACITOR 5.5V 0.047	1	
C7407		ECEA0JKS101	E.CAPACITOR 6.3V 100U	1	
C7409		ECUM1H104ZFN	C.CAPACITOR CH 50V 0.1U	1	
C7410		ECUM1H103ZFN	C.CAPACITOR CH 50V 0.01U	1	
C7421		ECUM1H103ZFN	C.CAPACITOR CH 50V 0.01U	1	
C7422		ECUM1H272KBN	C.CAPACITOR CH 50V 2700P	1	
C7431		ECUM1H103ZFN	C.CAPACITOR CH 50V 0.01U	1	
C7651		ECEA1CKN100	E.CAPACITOR 16V 10U	1	
C7653		ECQB1H332JH	P.CAPACITOR 50V 3300P	1	
C7668		ECUM1H103ZFN	C.CAPACITOR CH 50V 0.01U	1	
C7685		ECEA1HK010	E.CAPACITOR 50V 1U	1	
C7801		ECQB1H102JH	P.CAPACITOR 50V 1000P	1	
C7802		ECQB1H471JH	P.CAPACITOR 50V 470P	1	
C7803		ECQB1H472JH	P.CAPACITOR 50V 4700P	1	
C7804		ECQV1H104JZ	P.CAPACITOR 50V 0.1U	1	
C7805		ECQB1H103JH	P.CAPACITOR 50V 0.01U	1	
C7806		ECQB1H333JH	P.CAPACITOR 50V 0.033U	1	

Ref.No.		Part No.	Part Name & Description	Pcs	Remarks
C7815		VCYD1C104MR1	S.CAPACITOR 16V 0.1U	1	
C7816		ECEA0JKA331	E.CAPACITOR 6.3V 330U	1	
C7851		ECQV1H104JZ	P.CAPACITOR 50V 0.1U	1	
C7852		ECEA1AK101	E.CAPACITOR 10V 100U	1	
C7853,54		ECCF1H330JC	C.CAPACITOR 50V 33P	2	
C7855,56		ECEA1HK010	E.CAPACITOR 50V 1U	2	
C7860		ECEA0JK101U	E.CAPACITOR 6.3V 100U	1	
D301		MA4091M	DIODE	1	
D710		MA3100L	DIODE	1	
D771		MA151WK	DIODE	1	
D772		MA165	DIODE	1	
D773		11ES1	DIODE	1	
D1001,02		MA165	DIODE	2	
D2003,04		MA165	DIODE	2	
D2007-10		MA165	DIODE	4	
D2403		MA165	DIODE	1	
D2405,06		MA165	DIODE	2	
D2409		MA204WA	DIODE	1	
D2501		MA165	DIODE	1	
D3001		MA165	DIODE	1	
D3009		MA165	DIODE	1	
D3101		MA165	DIODE	1	
D3102		MA29WA	DIODE	1	
D3901,02		MA165	DIODE	2	
D4003		MA165	DIODE	1	
D6001		MA4051	DIODE	1	
D6002-04		MA165	DIODE	3	
D6005		ERA15-01	DIODE	1	
D6006		MA165	DIODE	1	
D6008		MA723	DIODE	1	
D6009		MA4150L	DIODE	1	
D6023		MA165	DIODE	1	
D6801		MA165	DIODE	1	
D7401,02		MA723	DIODE	2	
D7672,73		MA3150H	DIODE	2	
D7851		MA165	DIODE	1	
DL803		EFDWF124A13A	DELAY	1	
F6001		VSF0077	FUSE	1	<!>
FL301		ELB4M022	FILTER	1	
FL302		VLF0499	FILTER	1	
FL303		VLF0727	FILTER	1	
FL801		ELB4W002	FILTER	1	
FL851		VLF0143	FILTER	1	
FL3101		VLF0413	FILTER	1	
IC301		VEFH03D	HIC	1	
IC303		MSM6965-3RS	IC	1	
IC701		M51366SP	IC	1	
IC801		VEFH04F	P.C.BOARD	1	
IC802		M52055P	IC	1	
IC851		BA7025L	IC	1	
IC2001		MN6740VCQK	IC	1	
IC2101		BA6435S	IC	1	
IC2201		AN3814K	IC	1	
IC2301		AN6561L	IC	1	
IC2302		XRA10393N	IC	1	
IC2501		CF77384NS	IC	1	
IC2502		BA6305F	IC	1	
IC3101		BA7004	IC	1	
IC3801		M52063SP	IC	1	
IC3901		LA7150	IC	1	

Ref.No.		Part No.	Part Name & Description	Pcs	Remarks
IC4001		BA7766AS	IC	1	
IC4002		UPD4066BG	IC	1	
IC6003		MN12821R	IC	1	(R)
IC6801		MN15522VMS	IC	1	
IC7801		SAA4700	IC	1	
IC7851		MN158413VSSJ	IC	1	
IC7852		MN1280S	IC	1	(S)
J701		VJR0231	PACK PIN	1	
J702,03		VJR0406	PACK PIN	2	
J704		VJR0231	PACK PIN	1	
KR851		VJR0163	PACK PIN	1	
L301		VLQEL05F101K	COIL 100UH	1	
L302		VLQEL05F220K	COIL 22UH	1	
L303,04		VLQEL05F101K	COIL 100UH	2	
L306		VLQEL05F101K	COIL 100UH	1	
L307		VLQEL05F151K	COIL 150UH	1	
L308		VLQEL05F270K	COIL 27UH	1	
L309,10		VLQEL05F101K	COIL 100UH	2	
L311		VLQEL05F2R2K	COIL 2.2UH	1	
L701,02		ELESP680KA	COIL 68UH	2	
L711		ELQTR68XB	COIL 0.68UH	1	
L712		VLQ0305J1R2	COIL 1.2UH	1	
L714		VLQ0305J1R2	COIL 1.2UH	1	
L715		VLQ0213K680	COIL 68UH	1	
L716		ELESP560KA	COIL 56H	1	
L717,18		ELESP680KA	COIL 68UH	2	
L719		ELESP120KA	COIL 12UH	1	
L781		ELESP680KA	COIL 68UH	1	
L805		VLQEL05F101K	COIL 100UH	1	
L806		VLQEL05F681K	COIL 680UH	1	
L808		VLQEL05F470K	COIL 47UH	1	
L809		VLQEL05F331K	COIL 330UH	1	
L810		VLQEL05F101K	COIL 100UH	1	
L811		VLQEL05F470K	COIL 47UH	1	
L812		VLQEL05F681K	COIL 680UH	1	
L820		VLQEL05F101K	COIL 100UH	1	
L821		VLQEL05F150K	COIL 15UH	1	
L822		VLQ0213K150T	COIL 15H	1	
L851		VLQEL05F101K	COIL 100UH	1	
L2002		VLP0074	COIL	1	
L2003		ELESP101KA	COIL	1	
L2101		ELESP102KA	COIL 1000UH	1	
L3001-03		ELESP101KA	COIL	3	
L3005		ELESP120KA	COIL 12UH	1	
L3006		ELESP6R8KA	COIL	1	
L3007		ELESP101KA	COIL	1	
L3008		ELESP3R3KA	COIL	1	
L3101		VLQEL05F101K	COIL 100UH	1	
L3805		VLQEL05F101K	COIL 100UH	1	
L3901		VLQEL05F1R0K	COIL 1UH	1	
L3902		VLQEL05F2R7K	COIL 2.7UH	1	
L3903		VLQEL05F1R0K	COIL 1UH	1	
L3904		VLQEL06F471K	COIL 470UH	1	
L4001		VLQEL07F822J	COIL 8200UH	1	
L4002		ELESP471KA	COIL	1	
L6101		VLQEL05F101K	COIL 100UH	1	
L7401		ELESP1R0KA	COIL 1UH	1	
L7402		ELESP101KA	COIL	1	
L7403		VLP0085	FILTER	1	
L7404		ELESP1R0KA	COIL 1UH	1	
L7405		ELESP101KA	COIL	1	
P001		VJS1237T	CONNECTOR (FEMALE)	1	
P006		VJS1902	CONNECTOR (FEMALE)	1	

Ref.No.		Part No.	Part Name & Description	Pcs	Remarks
P501		VJS2382T	CONNECTOR (FEMALE)	1	
P1001		VJS2571A013	CONNECTOR (FEMALE)	1	
P1502		VJS1141T	CONNECTOR (FEMALE)	1	
P2001		VJP1932T	CONNECTOR (MALE)	1	
P2001		VJS1932T	CONNECTOR (FEMALE)	1	
P2201		VJP1237T	CONNECTOR(MALE) 10P	1	
P2201		VJS1237T	CONNECTOR (FEMALE)	1	
P3001		VJP1931T	CONNECTOR (MALE)	1	
P3001		VJS2382T	CONNECTOR (FEMALE)	1	
P3902		VJS1469	CONNECTOR(FEMALE)	1	
P4001		VJP2622	CONNECTOR	1	
P4002		VJP1229T	CONNECTOR(MALE) 2P	1	
P4002		VJS1229T	CONNECTOR (FEMALE)	1	
P4003		VJP1231T	CONNECTOR(MALE) 4P	1	
P4003		VJS1231T	CONNECTOR (FEMALE)	1	
P6001		VJS2571A012	CONNECTOR (FEMALE)	1	
P6002		VJS2571A004	CONNECTOR (FEMALE)	1	
P6202		VJS1231T	CONNECTOR (FEMALE)	1	
P7401		VJS1662	CONNECTOR (FEMALE)	1	
P7402		VJS2571A015	CONNECTOR (FEMALE)	1	
PK1		VJR0189	CONNECTOR (MALE)	1	
PK2201		VJR0452	PACK PIN	1	
PK2202		VJR0348	PACK PIN	1	
PK3901		VJR0348	PACK PIN	1	
PK3902		VJR0523	PACK PIN	1	
PK3903		VJR0348	PACK PIN	1	
PK3904		VJR0416	PACK PIN	1	
PK6101		VJR0277	PACK PIN	1	
Q301		MSB709	TRANSISTOR	1	(Q,R,S)
Q302		MSC2295	TRANSISTOR	1	(B,C)
Q303		MSC2295	TRANSISTOR	1	(B,C)
Q304		MSD601	TRANSISTOR	1	(Q,R,S)
Q703		2SD601	TRANSISTOR	1	(S,T)
Q710		2SC2377	TRANSISTOR	1	(C,D)
Q712		2SD638	TRANSISTOR	1	
Q713		2SD1328	TRANSISTOR	1	(S)
Q771		2SD601	TRANSISTOR CHIP	1	(S,T)
Q804		MSB709	TRANSISTOR	1	(Q,R,S)
Q2001		MSD601	TRANSISTOR	1	(Q,R,S)
Q2002		2SD1996	TRANSISTOR	1	(S)
Q2003		MSB709	TRANSISTOR	1	
Q2301		MSD601	TRANSISTOR	1	(Q,R,S)
Q2302,03		MSB709	TRANSISTOR	2	(Q,R,S)
Q3001		MSC2295	TRANSISTOR	1	
Q3003		MSD601	TRANSISTOR	1	
Q3004		MSB709	TRANSISTOR	1	(Q,R,S)
Q3006		MSC2295	TRANSISTOR	1	
Q3007		MSB709	TRANSISTOR	1	(Q,R,S)
Q3101		MSD601	TRANSISTOR	1	
Q4001		MSD602	TRANSISTOR	1	(R)
Q4002		2SA1309	TRANSISTOR	1	
Q6001		2SD893	TRANSISTOR	1	
Q6002,03		2SD1994	TRANSISTOR	2	(S)
Q6004		2SD1992	TRANSISTOR	1	
Q6006		2SB1321	TRANSISTOR	1	
Q6007		MSB710	TRANSISTOR	1	(R,S)
Q6008		2SD1273	TRANSISTOR	1	(P)
Q6010		2SD1991A	TRANSISTOR	1	
Q6011		MSB709	TRANSISTOR	1	
Q6101		2SC2206	TRANSISTOR	1	(B,C)
QR304		MRN1403	TRANSISTOR-RESISTOR	1	
QR701		MRN1404	TRANSISTOR-RESISTOR	1	
QR702		MRN1404	TRANSISTOR-RESISTOR	1	
QR711,12		MRN1403	TRANSISTOR-RESISTOR	2	
QR714		MRN1402	TRANSISTOR-RESISTOR	1	
QR853		UN1213	TRANSISTOR-RESISTOR	1	

Ref.No.		Part No.	Part Name & Description	Pcs	Remarks
QR1001		MRN1404	TRANSISTOR-RESISTOR	1	
QR2002		DTC363EK	COMBI.TR-R	1	
QR2004		2SD1676	TRANSISTOR-RESISTOR	1	
QR2005		MRN1404	TRANSISTOR-RESISTOR	1	
QR2402,03		MRN2403	TRANSISTOR-RESISTOR	2	
QR2502		DTC363EK	COMBI.TR-R	1	
QR3004		MRN2402	TRANSISTOR-RESISTOR	1	
QR3005		MRN1404	TRANSISTOR-RESISTOR	1	
QR3008		MRN1404	TRANSISTOR-RESISTOR	1	
QR3801		MRN2404	TRANSISTOR-RESISTOR	1	
QR3802		MRN1404	TRANSISTOR-RESISTOR	1	
QR4001,02		MRN1404	TRANSISTOR-RESISTOR	2	
QR6002		UN2119	TRANSISTOR-RESISTOR	1	
QR6003		MRN2404	TRANSISTOR-RESISTOR	1	
QR6004		MRN1404	TRANSISTOR-RESISTOR	1	
QR6007		MRN1403	TRANSISTOR-RESISTOR	1	
QR6011,12		MRN1403	TRANSISTOR-RESISTOR	2	
QR6201		MRN2404	TRANSISTOR-RESISTOR	1	
QR6202		MRN1404	TRANSISTOR-RESISTOR	1	
QR7401		MRN1402	TRANSISTOR-RESISTOR	1	
QR7851		UN1211	TRANSISTOR-RESISTOR	1	
QR7852		UN1213	TRANSISTOR-RESISTOR	1	
			RESISTORS		
R301		ERJ6GMYJ122	M.RESISTOR CH 1/10W 1.2K	1	
R302		ERJ6GMYJ391	M.RESISTOR CH 1/10W 390	1	
R303		ERJ6GMYJ103	M.RESISTOR CH 1/10W 10K	1	
R304		ERJ6GMYJ102	M.RESISTOR CH 1/10W 1K	1	
R305		ERJ6GMYJ824	M.RESISTOR CH 1/10W 820K	1	
R306		ERJ6GMYJ152	M.RESISTOR CH 1/10W 1.5K	1	
R307		ERJ6GMYJ102	M.RESISTOR CH 1/10W 1K	1	
R308		ERJ6GMYJ123	M.RESISTOR CH 1/10W 12K	1	
R309		ERJ6GMYJ272	M.RESISTOR CH 1/10W 2.7K	1	
R310		ERJ6GMYJ103	M.RESISTOR CH 1/10W 10K	1	
R311		ERJ6GMYJ272	M.RESISTOR CH 1/10W 2.7K	1	
R312		ERJ6GMYJ182	M.RESISTOR CH 1/10W 1.8K	1	
R317		ERJ6GMYJ471	M.RESISTOR CH 1/10W 470	1	
R320		ERJ6GMYJ102	M.RESISTOR CH 1/10W 1K	1	
R325		ERJ6GMYJ151	M.RESISTOR CH 1/10W 150	1	
R326		ERJ6GMYJ822	M.RESISTOR CH 1/10W 8.2K	1	
R327		ERJ6GMYJ332	M.RESISTOR CH 1/10W 3.3K	1	
R328		ERJ6GMYJ272	M.RESISTOR CH 1/10W 2.7K	1	
R329		ERJ6GMYJ103	M.RESISTOR CH 1/10W 10K	1	
R330		ERJ6GMYJ183	M.RESISTOR CH 1/10W 18K	1	
R331		ERJ6GMYJ561	M.RESISTOR CH 1/10W 560	1	
R332		ERJ6GMYJ222	M.RESISTOR CH 1/10W 2.2K	1	
R334,35		ERJ6GMYJ102	M.RESISTOR CH 1/10W 1K	2	
R338		ERJ6GMYJ124	M.RESISTOR CH 1/10W 120K	1	
R339		ERJ6GMYJ101	M.RESISTOR CH 1/10W 100	1	
R712		ERJ6GEYJ682	M.RESISTOR CH 1/10W 6.8K	1	
R713		ERJ6GEYJ681	M.RESISTOR CH 1/10W 680	1	
R714		ERD2FCG330	C.RESISTOR 2W 33	1	
R715		ERJ6GEYJ271	M.RESISTOR CH 1/10W 270	1	
R716		ERJ6GEYJ152	M.RESISTOR CH 1/10W 1.5K	1	
R717		ERJ6GEYJ332	M.RESISTOR CH 1/10W 3.3K	1	
R718		ERJ6GEYJ754	M.RESISTOR CH 1/10W 750K	1	
R719,20		ERJ6GEYJ682	M.RESISTOR CH 1/10W 6.8K	2	
R721		ERJ6GEYJ272	M.RESISTOR CH 1/10W 2.7K	1	
R722		ERJ6GEYJ332	M.RESISTOR CH 1/10W 3.3K	1	
R723		ERJ6GEYJ183	M.RESISTOR CH 1/10W 180K	1	
R724		ERDS2TJ101	C.RESISTOR 1/4W 100	1	
R725		ERJ6GEYJ182	M.RESISTOR CH 1/10W 1.8K	1	
R726		ERJ6GEYJ472	M.RESISTOR CH 1/10W 4.7K	1	
R727		ERJ6GEYJ471	M.RESISTOR CH 1/10W 470	1	
R728		ERDS2TJ471	C.RESISTOR 1/4W 470	1	
R729,30		ERJ6GEYJ331	M.RESISTOR CH 1/10W 330	2	
R737		ERJ6GEYJ274	M.RESISTOR CH 1/10W 270K	1	
R738		ERJ6GEYJ334	M.RESISTOR CH 1/10W 330K	1	
R739		ERJ6GEYJ681	M.RESISTOR CH 1/10W 680	1	
R740		ERJ6GEYJ473	M.RESISTOR CH 1/10W 47K	1	
R741		ERJ6GEYJ562	M.RESISTOR CH 1/10W 5.6K	1	
R743		ERJ6GEYJ470	M.RESISTOR CH 1/10W 47	1	
R744		ERJ6GEYJ821	M.RESISTOR CH 1/10W 820	1	

Ref.No.		Part No.	Part Name & Description	Pcs	Remarks
R745		ERJ6GEYJ331	M.RESISTOR CH 1/10W 330	1	
R746		ERDS2TJ181	C.RESISTOR 1/4W 180	1	
R747		ERJ6GEYJ471	M.RESISTOR CH 1/10W 470	1	
R750		ERJ6GEYJ182	M.RESISTOR CH 1/10W 1.8K	1	
R757		ERJ6GEYJ222	M.RESISTOR CH 1/10W 2.2K	1	
R758		ERJ6GEYJ102	M.RESISTOR CH 1/10W 1K	1	
R759		ERJ6GEYJ103	M.RESISTOR CH 1/10W 10K	1	
R763		ERJ6GEYJ103	M.RESISTOR CH 1/10W 10K	1	
R764		ERJ6GEYJ822	M.RESISTOR CH 1/10W 8.2K	1	
R772		ERJ6GEYJ271	M.RESISTOR CH 1/10W 270	1	
R773		ERJ6GEYJ472	M.RESISTOR CH 1/10W 4.7K	1	
R774		ERJ6GEYJ562	M.RESISTOR CH 1/10W 5.6K	1	
R781		ERJ6GEYJ271	M.RESISTOR CH 1/10W 270	1	
R782		ERJ6GEYJ821	M.RESISTOR CH 1/10W 820	1	
R792		ERDS2TJ120	C.RESISTOR 1/4W 12	1	
R795		ERJ6GEYJ102	M.RESISTOR CH 1/10W 1K	1	
R815		ERJ6GMYJ103	M.RESISTOR CH 1/10W 10K	1	
R816		ERJ6GMYJ822	M.RESISTOR CH 1/10W 8.2K	1	
R818		ERJ6GMYJ102	M.RESISTOR CH 1/10W 1K	1	
R819		ERJ6GMYJ182	M.RESISTOR CH 1/10W 1.8K	1	
R820		ERJ6GMYJ222	M.RESISTOR CH 1/10W 2.2K	1	
R821		ERJ6GMYJ273	M.RESISTOR CH 1/10W 27K	1	
R822		ERJ6GMYJ183	M.RESISTOR CH 1/10W 18K	1	
R824		ERJ6GMYJ102	M.RESISTOR CH 1/10W 1K	1	
R825		ERJ6GMYJ182	M.RESISTOR CH 1/10W 1.8K	1	
R831		ERJ6GMYJ821	M.RESISTOR CH 1/10W 820	1	
R841-43		ERJ6GMYJ272	M.RESISTOR CH 1/10W 2.7K	3	
R844,45		ERJ6GMYJ122	M.RESISTOR CH 1/10W 1.2K	2	
R846,47		ERJ6GMYJ271	M.RESISTOR CH 1/10W 270	2	
R851		ERDS2TJ223	C.RESISTOR 1/4W 22K	1	
R852		ERDS2TJ390	C.RESISTOR 1/4W 39	1	
R853		ERDS2TJ154	C.RESISTOR 1/4W 150K	1	
R854		ERDS2TJ222	C.RESISTOR 1/4W 2.2K	1	
R855		ERDS2TJ102	C.RESISTOR 1/4W 1K	1	
R856		ERDS2TJ103	C.RESISTOR 1/4W 10K	1	
R858		ERDS2TJ561	C.RESISTOR 1/4W 560	1	
R2001,02		ERJ6GMYJ102	M.RESISTOR CH 1/10W 1K	2	
R2004,05		ERJ6GMYJ223	M.RESISTOR CH 1/10W 22K	2	
R2006		ERJ6GMY0R00	M.RESISTOR CH 1/10W 0.00	1	
R2007		ERJ6GMYJ332	M.RESISTOR CH 1/10W 3.3K	1	
R2008		ERJ6GMYJ102	M.RESISTOR CH 1/10W 1K	1	
R2009		ERJ6GMYJ393	M.RESISTOR CH 1/10W 39K	1	
R2010		ERJ6GMYJ103	M.RESISTOR CH 1/10W 10K	1	
R2011		ERJ6GMYJ152	M.RESISTOR CH 1/10W 1.5K	1	
R2012		ERJ6GMYJ221	M.RESISTOR CH 1/10W 220	1	
R2013		ERJ6GMYJ103	M.RESISTOR CH 1/10W 10K	1	
R2014		ERJ6GMYJ824	M.RESISTOR CH 1/10W 820K	1	
R2015,16		ERJ6GMYJ223	M.RESISTOR CH 1/10W 22K	2	
R2017		ERJ6GMYJ222	M.RESISTOR CH 1/10W 2.2K	1	
R2018		ERJ6GMYJ221	M.RESISTOR CH 1/10W 220	1	
R2019		ERJ6GMYJ124	M.RESISTOR CH 1/10W 120K	1	
R2020		ERJ6GMYJ821	M.RESISTOR CH 1/10W 820	1	
R2021		ERJ6GMYJ562	M.RESISTOR CH 1/10W 5.6K	1	
R2022		ERJ6GMYJ272	M.RESISTOR CH 1/10W 2.7K	1	
R2023		ERJ6GMYJ222	M.RESISTOR CH 1/10W 2.2K	1	
R2024		ERJ6GMYJ823	M.RESISTOR CH 1/10W 82K	1	
R2025		ERJ6GMYG562	M.RESISTOR CH 1/10W 5.6K	1	
R2026		ERJ6GMYG392	M.RESISTOR CH 1/10W 3.9K	1	
R2027		ERJ6GMYJ473	M.RESISTOR CH 1/10W 47K	1	
R2028		ERJ6GMYJ332	M.RESISTOR CH 1/10W 3.3K	1	
R2029		ERJ6GMYJ473	M.RESISTOR CH 1/10W 47K	1	
R2030		ERJ6GMYJ123	M.RESISTOR CH 1/10W 12K	1	
R2031		ERJ6GMYJ392	M.RESISTOR CH 1/10W 3.9K	1	
R2032		ERDS2TJ471	C.RESISTOR 1/4W 470	1	
R2033		ERJ6GMYJ824	M.RESISTOR CH 1/10W 820K	1	
R2034		ERJ6GMYJ104	M.RESISTOR CH 1/10W 100K	1	
R2035,36		ERJ6GMYJ223	M.RESISTOR CH 1/10W 22K	2	
R2037		ERJ6GMYJ103	M.RESISTOR CH 1/10W 10K	1	
R2038		ERJ6GMYJ102	M.RESISTOR CH 1/10W 1K	1	
R2040		ERJ6GMYJ471	M.RESISTOR CH 1/10W 470	1	
R2051		ERJ6GMYJ103	M.RESISTOR CH 1/10W 10K	1	
R2101-03		ERDS2TJ560	C.RESISTOR 1/4W 56	3	
R2104		ERX12SJR47E	M.RESISTOR 1/2W 0.47	1	
R2105		ERJ6GMYJ102	M.RESISTOR CH 1/10W 1K	1	
R2106		ERJ6GMYG561	M.RESISTOR CH 1/10W 560	1	

Ref.No.		Part No.	Part Name & Description	Pcs	Remarks
R2107		ERJ6GMYG153	M.RESISTOR CH 1/10W 15K	1	
R2108		ERJ6GMYG133	M.RESISTOR CH 1/10W 13K	1	
R2109		ERJ6GMYJ330	M.RESISTOR CH 1/10W 33	1	
R2201		ERDS2TJ122	C.RESISTOR 1/4W 1.2K	1	
R2202-04		ERDS2TJ150	C.RESISTOR 1/4W 15	3	
R2205		ERX12SJR68E	M.RESISTOR 1/2W 0.68	1	
R2301		ERJ6GMYJ103	M.RESISTOR CH 1/10W 10K	1	
R2302		ERJ6GMYJ152	M.RESISTOR CH 1/10W 1.5K	1	
R2303		ERJ6GMYJ393	M.RESISTOR CH 1/10W 39K	1	
R2304		ERJ6GMYJ221	M.RESISTOR CH 1/10W 220	1	
R2305		ERJ6GMYJ103	M.RESISTOR CH 1/10W 10K	1	
R2306		ERJ6GMYJ102	M.RESISTOR CH 1/10W 1K	1	
R2307		ERJ6GMYJ473	M.RESISTOR CH 1/10W 47K	1	
R2308		ERJ6GMYJ562	M.RESISTOR CH 1/10W 5.6K	1	
R2309		ERJ6GMYJ824	M.RESISTOR CH 1/10W 820K	1	
R2310		ERJ6GMYJ223	M.RESISTOR CH 1/10W 22K	1	
R2311		ERJ6GMYJ824	M.RESISTOR CH 1/10W 820K	1	
R2312,13		ERJ6GMYJ223	M.RESISTOR CH 1/10W 22K	2	
R2314,15		ERJ6GMYJ103	M.RESISTOR CH 1/10W 10K	2	
R2316		ERJ6GMYJ473	M.RESISTOR CH 1/10W 47K	1	
R2402		ERJ6GMYJ561	M.RESISTOR CH 1/10W 560	1	
R2403		ERJ6GMYJ103	M.RESISTOR CH 1/10W 10K	1	
R2405		ERJ6GMYJ562	M.RESISTOR CH 1/10W 5.6K	1	
R2501		ERJ6GMYJ223	M.RESISTOR CH 1/10W 22K	1	
R2503		ERJ6GMYJ103	M.RESISTOR CH 1/10W 10K	1	
R2504		ERJ6GMYJ823	M.RESISTOR CH 1/10W 82K	1	
R2505		ERJ6GMYJ221	M.RESISTOR CH 1/10W 220	1	
R2506		ERJ6GMYJ332	M.RESISTOR CH 1/10W 3.3K	1	
R3001		ERJ6GMYJ103	M.RESISTOR CH 1/10W 10K	1	
R3002		ERJ6GMYJ682	M.RESISTOR CH 1/10W 6.8K	1	
R3003		ERJ6GMYJ472	M.RESISTOR CH 1/10W 4.7K	1	
R3019		ERDS2TJ471	C.RESISTOR 1/4W 470	1	
R3022,23		ERJ6GMYJ821	M.RESISTOR CH 1/10W 820	2	
R3027		ERJ6GMYJ562	M.RESISTOR CH 1/10W 5.6K	1	
R3028		ERJ6GMYJ102	M.RESISTOR CH 1/10W 1K	1	
R3029		ERJ6GMYJ272	M.RESISTOR CH 1/10W 2.7K	1	
R3030		ERJ6GMYJ750	M.RESISTOR CH 1/10W 75	1	
R3042		ERJ6GMYJ102	M.RESISTOR CH 1/10W 1K	1	
R3062		ERJ6GMYJ223	M.RESISTOR CH 1/10W 22K	1	
R3063		ERJ6GMYJ103	M.RESISTOR CH 1/10W 10K	1	
R3071		ERJ6GMYJ222	M.RESISTOR CH 1/10W 2.2K	1	
R3085		ERJ6GMYJ221	M.RESISTOR CH 1/10W 220	1	
R3086		ERJ6GMYJ103	M.RESISTOR CH 1/10W 10K	1	
R3087,88		ERJ6GMYJ104	M.RESISTOR CH 1/10W 100K	2	
R3094		ERJ6GMY0R00	M.RESISTOR CH 1/10W 0.00	1	
R3095		ERJ6GMYJ102	M.RESISTOR CH 1/10W 1K	1	
R3096		ERDS2TJ102	C.RESISTOR 1/4W 1K	1	
R3101		ERJ6GMYJ102	M.RESISTOR CH 1/10W 1K	1	
R3102		ERJ6GMYJ152	M.RESISTOR CH 1/10W 1.5K	1	
R3103		ERJ6GMYJ392	M.RESISTOR CH 1/10W 3.9K	1	
R3104		ERJ6GMYJ152	M.RESISTOR CH 1/10W 1.5K	1	
R3105		ERJ6GMYJ561	M.RESISTOR CH 1/10W 560	1	
R3812		ERJ6GMYJ223	M.RESISTOR CH 1/10W 22K	1	
R3813		ERJ6GMYJ152	M.RESISTOR CH 1/10W 1.5K	1	
R3814		ERJ6GMYJ183	M.RESISTOR CH 1/10W 18K	1	
R3815		ERJ6GMYJ333	M.RESISTOR CH 1/10W 33K	1	
R3816		ERJ6GMYJ223	M.RESISTOR CH 1/10W 22K	1	
R3817		ERJ6GMYJ391	M.RESISTOR CH 1/10W 390	1	
R3818		ERJ6GMYJ102	M.RESISTOR CH 1/10W 1K	1	
R3819		ERJ6GMYJ152	M.RESISTOR CH 1/10W 1.5K	1	
R3820		ERJ6GMYJ272	M.RESISTOR CH 1/10W 2.7K	1	
R3821		ERJ6GMYJ122	M.RESISTOR CH 1/10W 1.2K	1	
R3822,23		ERJ6GMYJ681	M.RESISTOR CH 1/10W 680	2	
R3901		ERJ6GEYJ750	M.RESISTOR CH 1/10W 75	1	
R3902		ERDS2TJ750	C.RESISTOR 1/4W 75	1	
R3903,04		ERJ6GEYJ242	M.RESISTOR CH 1/10W 2.4K	2	
R3905		ERJ6GEYJ101	M.RESISTOR CH 1/10W 100	1	
R3906		ERJ6GEYJ273	M.RESISTOR CH 1/10W 27K	1	
R3908		ERJ6GEYJ333	M.RESISTOR CH 1/10W 33K	1	
R3909		ERJ6GEYJ750	M.RESISTOR CH 1/10W 75	1	
R3910		ERDS2TJ750	C.RESISTOR 1/4W 75	1	
R3912		ERJ6GEYJ223	M.RESISTOR CH 1/10W 22K	1	
R3913		ERJ6GEYJ123	M.RESISTOR CH 1/10W 12K	1	
R3916		ERDS2T0	C.RESISTOR 1/4W 0	1	
R4001		ERJ6GMYJ100	M.RESISTOR CH 1/10W 10	1	

Ref.No.		Part No.	Part Name & Description	Pcs	Remarks
R4002		ERJ6GMYJ153	M.RESISTOR CH 1/10W 15K	1	
R4003		ERJ6GMYG223	M.RESISTOR CH 1/10W 22K	1	
R4004		ERJ6GMYJ562	M.RESISTOR CH 1/10W 5.6K	1	
R4007		ERJ6GMYJ221	M.RESISTOR CH 1/10W 220	1	
R4008		ERJ6GMYJ122	M.RESISTOR CH 1/10W 1.2K	1	
R4010		ERJ6GMYJ683	M.RESISTOR CH 1/10W 68K	1	
R4012		ERJ6GMYJ331	M.RESISTOR CH 1/10W 330	1	
R4013		ERJ6GMYJ394	M.RESISTOR CH 1/10W 390K	1	
R4014		ERJ6GMYG133	M.RESISTOR CH 1/10W 13K	1	
R4016		ERJ6GMYJ105	M.RESISTOR CH 1/10W 1M	1	
R4017		ERJ6GMYJ302	M.RESISTOR CH 1/10W 3K	1	
R4018		ERJ6GMYJ223	M.RESISTOR CH 1/10W 22K	1	
R4019		ERJ6GMYJ563	M.RESISTOR CH 1/10W 56K	1	
R4020		ERJ6GMYJ562	M.RESISTOR CH 1/10W 5.6K	1	
R4021		ERJ6GMYJ103	M.RESISTOR CH 1/10W 10K	1	
R4022		ERJ6GMYJ473	M.RESISTOR CH 1/10W 47K	1	
R4023		ERJ6GMYG473	M.RESISTOR CH 1/10W 47K	1	
R4024,25		ERJ6GMYG104	M.RESISTOR CH 1/10W 100K	2	
R4026		ERJ6GMYJ123	M.RESISTOR CH 1/10W 12K	1	
R4027		ERJ6GMYJ153	M.RESISTOR CH 1/10W 15K	1	
R4028		ERJ6GMYJ102	M.RESISTOR CH 1/10W 1K	1	
R4031		ERJ6GMYG272	M.RESISTOR CH 1/10W 2.7K	1	
R4032		ERJ6GMYG622	M.RESISTOR CH 1/10W 6.2K	1	
R4035		ERJ6GMYJ822	M.RESISTOR CH 1/10W 8.2K	1	
R4036		ERJ6GMYJ562	M.RESISTOR CH 1/10W 5.6K	1	
R4038		ERDS2TJ562	C.RESISTOR 1/4W 5.6K	1	
R4039		ERJ6GMYJ473	M.RESISTOR CH 1/10W 47K	1	
R4040		ERJ6GMYJ103	M.RESISTOR CH 1/10W 10K	1	
R4041		ERJ6GMYJ332	M.RESISTOR CH 1/10W 3.3K	1	
R4042		ERJ6GMYJ681	M.RESISTOR CH 1/10W 680	1	
R4044		ERJ6GMY0R00	M.RESISTOR CH 1/10W 0.00	1	
R4048		ERJ6GMYJ473	M.RESISTOR CH 1/10W 47K	1	
R4049		ERJ6GEY0R00	M.RESISTOR CH 1/10W 0	1	
R4051		ERJ6GMYJ473	M.RESISTOR CH 1/10W 47K	1	
R6001-03		ERJ6GMYJ101	M.RESISTOR CH 1/10W 100	3	
R6004,05		ERJ6GMYJ333	M.RESISTOR CH 1/10W 33K	2	
R6006		ERJ6GMYJ332	M.RESISTOR CH 1/10W 3.3K	1	
R6007		ERJ6GMYJ122	M.RESISTOR CH 1/10W 1.2K	1	
R6008		ERJ6GMYJ561	M.RESISTOR CH 1/10W 560	1	
R6009		ERJ6GMYJ333	M.RESISTOR CH 1/10W 33K	1	
R6010		ERJ6GMYJ561	M.RESISTOR CH 1/10W 560	1	
R6011		ERJ6GMYJ333	M.RESISTOR CH 1/10W 33K	1	
R6012		ERJ6GMYJ222	M.RESISTOR CH 1/10W 2.2K	1	
R6013		ERJ6GMYJ683	M.RESISTOR CH 1/10W 68K	1	
R6014		ERJ6GMYJ473	M.RESISTOR CH 1/10W 47K	1	
R6015		ERJ6GMYJ101	M.RESISTOR CH 1/10W 100	1	
R6017		ERJ6GMYJ221	M.RESISTOR CH 1/10W 220	1	
R6018		ERJ6GMYJ131	M.RESISTOR CH 1/10W 130	1	
R6019		ERJ6GMYJ562	M.RESISTOR CH 1/10W 5.6K	1	
R6020		ERJ6GMYJ152	M.RESISTOR CH 1/10W 1.5K	1	
R6021		ERJ6GMYJ201	M.RESISTOR CH 1/10W 200	1	
R6022		ERG3SJ220	M.RESISTOR 3W 22	1	
R6023		ERJ6GMYJ471	M.RESISTOR CH 1/10W 470	1	
R6024		ERJ6GMYJ561	M.RESISTOR CH 1/10W 560	1	
R6025		ERJ6GMYJ391	M.RESISTOR CH 1/10W 390	1	
R6026		ERD2FCVG220	C.RESISTOR 2W 22	1	
R6028		ERJ6GMYJ103	M.RESISTOR CH 1/10W 10K	1	
R6029		ERDS2TJ152	C.RESISTOR 1/4W 1.5K	1	
R6039		ERJ6GMYJ473	M.RESISTOR CH 1/10W 47K	1	
R6040		ERJ6GMYJ562	M.RESISTOR CH 1/10W 5.6K	1	
R6041		ERJ6GMYJ332	M.RESISTOR CH 1/10W 3.3K	1	
R6042,43		ERJ6GMYJ222	M.RESISTOR CH 1/10W 2.2K	2	
R6044,45		ERJ6GMYJ221	M.RESISTOR CH 1/10W 220	2	
R6047		ERDS1TJ332	C.RESISTOR 1/2W 3.3K	1	
R6048		ERJ6GMYJ681	M.RESISTOR CH 1/10W 680	1	
R6049		ERJ6GMYJ222	M.RESISTOR CH 1/10W 2.2K	1	
R6053		ERG2SJ471U	M.RESISTOR 2W 470	1	
R6054		ERJ6GMYJ104	M.RESISTOR CH 1/10W 100K	1	
R6055		ERJ6GMYJ101	M.RESISTOR CH 1/10W 100	1	
R6056		ERJ6GMYJ473	M.RESISTOR CH 1/10W 47K	1	
R6057		ERJ6GMYJ222	M.RESISTOR CH 1/10W 2.2K	1	
R6059		ERJ6GMYJ102	M.RESISTOR CH 1/10W 1K	1	
R6060		ERJ6GMYJ104	M.RESISTOR CH 1/10W 100K	1	
R6101		ERJ6GEYJ103	M.RESISTOR CH 1/10W 10K	1	
R6102		ERJ6GEYJ333	M.RESISTOR CH 1/10W 33K	1	

Ref.No.		Part No.	Part Name & Description	Pcs	Remarks
R6103,04		ERJ6GEYJ102	M.RESISTOR CH 1/10W 1K	2	
R6201		ERJ6GMYJ101	M.RESISTOR CH 1/10W 100	1	
R6202		ERJ6GMYJ183	M.RESISTOR CH 1/10W 18K	1	
R6203		ERJ6GMYJ101	M.RESISTOR CH 1/10W 100	1	
R6204		ERJ6GMYJ391	M.RESISTOR CH 1/10W 390	1	
R6205		ERJ6GMYJ103	M.RESISTOR CH 1/10W 10K	1	
R6206		ERJ6GMYJ472	M.RESISTOR CH 1/10W 4.7K	1	
R7401		ERDS2TJ103	C.RESISTOR 1/4W 10K	1	
R7402		ERJ6GMYJ181	M.RESISTOR CH 1/10W 180	1	
R7656		ERJ6GEYJ221	M.RESISTOR CH 1/10W 220	1	
R7676		ERG1SJ152	M.RESISTOR 1W 1.5K	1	
R7801		ERDS2TJ472	C.RESISTOR 1/4W 4.7K	1	
R7802		ER0S2CKG7502	M.RESISTOR 1/4W 75K	1	
R7803,04		ERDS2TJ103	C.RESISTOR 1/4W 10K	2	
R7805		ERDS2TJ473	C.RESISTOR 1/4W 47K	1	
R7806		ER0S2CKG3601	M.RESISTOR 1/4W 3.6K	1	
R7807		ERDS2TJ474	C.RESISTOR 1/4W 470K	1	
R7851		ERDS2TJ103	C.RESISTOR 1/4W 10K	1	
R7852		ERDS2TJ332	C.RESISTOR 1/4W 3.3K	1	
R7860		ERDS2TJ471	C.RESISTOR 1/4W 470	1	
T703		EIV5EC013A	TRANSFORMER	1	
T704		EIV5EC006A1	TRANSFORMER	1	
T710		EULBEF023	TRANSFORMER	1	
T711		EIS5EC004A	TRANSFORMER	1	
T851		ELM7Q207A	COIL	1	
T4001		EIQ7QF013Q	TRANSFORMER	1	
VR302		EVN4YCA00B23	V.RESISTOR 2K	1	
VR701,02		EVN4YCA00B23	V.RESISTOR 2K	2	
VR741		EVNDRAA00B14	V.RESISTOR 10K	1	
VR751		EVNDRAA00B53	V.RESISTOR 5K	1	
VR803		EVNDRAA00B14	V.RESISTOR 10K	1	
VR2001		EVNDRAA00B54	V.RESISTOR 50K	1	
VR2009,10		EVND1AA00B25	V.RESISTOR 200K	2	
VR2011		EVNDRAA00B15	V.RESISTOR 100K	1	
VR3012		EVNDRAA00B52	V.RESISTOR 500	1	
VR3801		EVN4YCA00B14	V.RESISTOR 10K	1	
VR4002		EVNDRAA00B25	V.RESISTOR 200K	1	
X301		VSX0225	CRYSTAL OSCILLATOR	1	
X710		EFCH38MSP2	CRYSTAL OSCILLATOR	1	
X711		EFCS5R5MW5	FILTER	1	
X712		EFCS5R5MS5	FILTER	1	
X715		ELB5A043	FILTER	1	
X716		EFCA31R90M1	CRYSTAL OSCILLATOR	1	31.75MHZ
X717		EFCA40R40M1	FILTER	1	
X801		VSX0162	CRYSTAL OSCILLATOR	1	
X3101		VSX0099	CRYSTAL OSCILLATOR	1	
X6101		VSX0383	CRYSTAL OSCILLATOR	1	
X6801		VSX0258	CRYSTAL OSC.	1	
X7401		VSQ0565	CRYSTAL OSCILLATOR	1	
X7851		EFOA4R0M03C2	CRYSTAL OSCILLATOR	1	
			MISCELLANEOUS		
		VMA6768	EARTH ANGLE	1	
		ENC17976	RF CONVERTER	1	[SUPPLIED FROM M.B.V]
					<!> OR VEQ1043
		VEJ0840	ANT. TERMINAL PLATE	1	[SUPPLIED FROM M.B.V]
		VMZ1352	HEAT SINK COVER	1	
		VJF0379	CLAMP	1	
		VJF0858	CLAMP	1	
		VMC0462	EARTH SPRING	1	[FOR SUB MAIN]
		ENV57850H6	TUNER	1	[SUPPLIED FROM M.B.V]
					<!>[FOR TV DEMODU.]
		VSC2713	SHIELD(MAIN)	1	[FOR TV DEMODU.]
		VSC2712	SHIELD(TOP)	1	[FOR TV DEMODU.]
		VSC2714	SHIELD(BOTTOM)	1	[FOR TV DEMODU.]
		VEJ0776	REAR JACK	1	[SUPPLIED FROM M.B.V]

Ref.No.		Part No.	Part Name & Description	Pcs	Remarks
		VWJ14HW140MM	FLEXIBLE CABLE(14PIN)	1	(P7401-P7501)
		VWJ0374	FLEXIBLE CABLE(15PIN)	1	(P7402-P7502)
	■	VEP03764AA	MAIN C.B.A.		[SUPPLIED FROM M.B.V]
					<!>(NLA) NV-J35B
			CAPACITORS		
C301		ECEA1EKN2R2	E.CAPACITOR 25V 2.2U	1	
C302		ECEA0JK220	E.CAPACITOR 6.3V 22U	1	
C303		ECUM1E104ZFN	C.CAPACITOR CH 25V 0.1U	1	
C304		ECEA0JU331	E.CAPACITOR 6.3V 330U	1	
C305		ECEA1CK100	E.CAPACITOR 16V 10U	1	
C306		ECEA1EK4R7	E.CAPACITOR 25V 4.7U	1	
C307		ECUM1H470JCN	C.CAPACITOR CH 50V 47P	1	
C308		ECUM1H220JCN	C.CAPACITOR CH 50V 22P	1	
C309		ECUM1H473ZFN	C.CAPACITOR CH 50V 0.047U	1	
C310		ECEA1CK100	E.CAPACITOR 16V 10U	1	
C311,12		ECUM1H180JCN	C.CAPACITOR CH 50V 18P	2	
C313		ECEA1CK100	E.CAPACITOR 16V 10U	1	
C314		ECUM1H560JCN	C.CAPACITOR CH 50V 56P	1	
C315		ECUM1H390JCN	C.CAPACITOR CH 50V 39P	1	
C316		ECUM1H820JCN	C.CAPACITOR CH 50V 82P	1	
C317		ECEA1AK470	E.CAPACITOR 10V 47U	1	
C318		ECUM1H220JCN	C.CAPACITOR CH 50V 22P	1	
C319		ECUM1H471KBN	C.CAPACITOR CH 50V 470P	1	
C320		ECUM1H270JCN	C.CAPACITOR CH 50V 27P	1	
C321		ECEA1HK010	E.CAPACITOR 50V 1U	1	
C322		ECEA1HK2R2	E.CAPACITOR 50V 2.2U	1	
C323,24		ECEA1CK100	E.CAPACITOR 16V 10U	2	
C325,26		ECUM1H103ZFN	C.CAPACITOR CH 50V 0.01U	2	
C327,28		ECEA1CK100	E.CAPACITOR 16V 10U	2	
C329		ECUM1H103ZFN	C.CAPACITOR CH 50V 0.01U	1	
C331		ECUM1H103ZFN	C.CAPACITOR CH 50V 0.01U	1	
C332		ECQV1H334JZ	P.CAPACITOR 50V 0.33U	1	
C333		ECEA1HK4R7	E.CAPACITOR 50V 4.7U	1	
C334		ECUM1H103ZFN	C.CAPACITOR CH 50V 0.01U	1	
C335		ECUM1H680JCN	C.CAPACITOR CH 50V 68P	1	
C336		ECUM1H101JCN	C.CAPACITOR CH 50V 100P	1	
C337		ECUM1H270JCN	C.CAPACITOR CH 50V 27P	1	
C338		ECUM1E104ZFN	C.CAPACITOR CH 25V 0.1U	1	
C339		ECUM1H220JCN	C.CAPACITOR CH 50V 22P	1	
C340		ECEA1EK4R7	E.CAPACITOR 25V 4.7U	1	
C341		ECUM1H223KBN	C.CAPACITOR CH 50V 0.022U	1	
C342		ECUM1H101JCN	C.CAPACITOR CH 50V 100P	1	
C343		ECEA0JK220	E.CAPACITOR 6.3V 22U	1	
C345		ECUM1H103ZFN	C.CAPACITOR CH 50V 0.01U	1	
C349		ECUM1H470JCN	C.CAPACITOR CH 50V 47P	1	
C351		ECUM1H220JCN	C.CAPACITOR CH 50V 22P	1	
C352		ECQB1H562JZ3	F.CAPACITOR 50V 5600P	1	
C354		ECEA1CK100	E.CAPACITOR 16V 10U	1	
C360		ECUM1H153ZFN	C.CAPACITOR CH 50V 0.015U	1	
C701		ECEA1EK4R7	E.CAPACITOR 25V 4.7U	1	
C702		ECEA1CK100	E.CAPACITOR 16V 10U	1	
C703		ECEA1HK2R2	E.CAPACITOR 50V 2.2U	1	
C706		ECUM1H104ZFN	C.CAPACITOR CH 50V 0.1U	1	
C708		ECEA1CK100	E.CAPACITOR 16V 10U	1	
C710		ECUM1H103ZFN	C.CAPACITOR CH 50V 0.01U	1	
C717-20		ECUM1H103ZFN	C.CAPACITOR CH 50V 0.01U	4	
C721		ECEA1HKR27K	E.CAPACITOR 50V 0.27U	1	
C722		ECUM1H103ZFN	C.CAPACITOR CH 50V 0.01U	1	
C725		ECQV1H104JZ	P.CAPACITOR 50V 0.1U	1	
C728		ECUM1H103ZFN	C.CAPACITOR CH 50V 0.01U	1	
C730		ECEA1CK100	E.CAPACITOR 16V 10U	1	
C731		ECEA1CKS100	E.CAPACITOR 16V 10U	1	
C732		ECQV1H224BO	P.CAPACITOR 50V 0.22U	1	
C734		ECUM1H103ZFN	C.CAPACITOR CH 50V 0.01U	1	
C735		ECUM1H070DCN	C.CAPACITOR CH 50V 7P	1	
C736		ECQB1H103JH	P.CAPACITOR 50V 0.01U	1	

Ref.No.		Part No.	Part Name & Description	Pcs	Remarks
C737		ECUM1H151JCN	C.CAPACITOR CH 50V 150P	1	
C739		ECEA1HK010	E.CAPACITOR 50V 1U	1	
C740		ECUM1H103ZFN	C.CAPACITOR CH 50V 0.01U	1	
C741		ECEA1CK100	E.CAPACITOR 16V 10U	1	
C742		ECUN1H030CCN	C.CAPACITOR CH 50V 3P	1	
C743		ECUM1H270JSN	C.CAPACITOR CH 50V 27P	1	
C744		ECEA1HKR47	E.CAPACITOR 50V 0.47U	1	
C745		ECUX1H680JPN	C.CAPACITOR CH 50V 68P	1	
C746		ECUM1H150JCN	C.CAPACITOR CH 50V 15P	1	
C748		ECEA1CK330	E.CAPACITOR 16V 33U	1	
C749		ECEA1CK100	E.CAPACITOR 16V 10U	1	
C760		ECQV1H563JZ	P.CAPACITOR 50V 0.056U	1	
C782		ECUM1H060DCN	C.CAPACITOR CH 50V 6P	1	
C801,02		ECUM1H103ZFN	C.CAPACITOR CH 50V 0.01U	2	
C803		ECEA0JK470	E.CAPACITOR 6.3V 47U	1	
C804,05		ECUM1H103ZFN	C.CAPACITOR CH 50V 0.01U	2	
C806		ECUM1H471KBN	C.CAPACITOR CH 50V 470P	1	
C807,08		ECUM1H103ZFN	C.CAPACITOR CH 50V 0.01U	2	
C810		ECUM1H103ZFN	C.CAPACITOR CH 50V 0.01U	1	
C811		ECUM1H180JCN	C.CAPACITOR CH 50V 18P	1	
C812		ECUM1H103ZFN	C.CAPACITOR CH 50V 0.01U	1	
C813		ECUM1H330JCN	C.CAPACITOR CH 50V 33P	1	
C814		ECEA1AK101	E.CAPACITOR 10V 100U	1	
C815		ECQV1H154JZ	P.CAPACITOR 50V 0.15U	1	
C816		ECUM1E104ZFN	C.CAPACITOR CH 25V 0.1U	1	
C817		ECQV1H124JZ	P.CAPACITOR 50V 0.12U	1	
C818		ECUM1H471KBN	C.CAPACITOR CH 50V 470P	1	
C819		ECUM1H820JCN	C.CAPACITOR CH 50V 82P	1	
C820		ECEA1HK2R2	E.CAPACITOR 50V 2.2U	1	
C821		ECEA1HFS4R7	E.CAPACITOR 50V 4.7U	1	
C823		ECEA1HK2R2	E.CAPACITOR 50V 2.2U	1	
C824		ECEA1HK010	E.CAPACITOR 50V 1U	1	
C825		ECUM1H101JCN	C.CAPACITOR CH 50V 100P	1	
C826		ECEA1AU221	E.CAPACITOR 10V 220U	1	
C827		ECUM1H050DCN	C.CAPACITOR CH 50V 5P	1	
C828		ECUM1H102KBN	C.CAPACITOR CH 50V 1000P	1	
C829		ECQV1H474JZ	P.CAPACITOR 50V 0.47U	1	
C831,32		ECUM1E104ZFN	C.CAPACITOR CH 25V 0.1U	2	
C833		ECUM1H471KBN	C.CAPACITOR CH 50V 470P	1	
C839		ECUM1H103ZFN	C.CAPACITOR CH 50V 0.01U	1	
C840		ECEA1CK470	E.CAPACITOR 16V 47U	1	
C841-49		ECUM1H103ZFN	C.CAPACITOR CH 50V 0.01U	9	
C1001		ECEA1CK470	E.CAPACITOR 25V 47U	1	
C1003		ECEA0JK101U	E.CAPACITOR 6.3V 100U	1	
C1004		ECEA1CK470	E.CAPACITOR 16V 47U	1	
C2001		ECEA0JK221	E.CAPACITOR 6.3V 220U	1	
C2002		ECUM1H104ZFN	C.CAPACITOR CH 50V 0.1U	1	
C2003		ECQB1H472JZ	P.CAPACITOR 50V 4700P	1	
C2004		ECUM1H103ZFN	C.CAPACITOR CH 50V 0.01U	1	
C2005		ECQB1H103JZ	P.CAPACITOR 50V 0.01U	1	
C2006		ECEA0JK470	E.CAPACITOR 6.3V 47U	1	
C2007		ECUM1H472KBN	C.CAPACITOR CH 50V 4700P	1	
C2008		ECEA1HKN010	E.CAPACITOR 50V 1U	1	
C2009		ECEA1CKN4R7	E.CAPACITOR 16V 4.7U	1	
C2010		ECEA1HKR47	E.CAPACITOR 50V 0.47U	1	
C2011		ECUM1H562KBN	C.CAPACITOR CH 50V 5600P	1	
C2012		VCYD1E473KR	S.CAPACITOR 25V 0.047U	1	
C2013		ECEA1HK4R7	E.CAPACITOR 50V 4.7U	1	
C2014		ECEA0JK221	E.CAPACITOR 6.3V 220U	1	
C2015		ECEA0JK101U	E.CAPACITOR 6.3V 100U	1	
C2016		ECQB1H103JZ	P.CAPACITOR 50V 0.01U	1	
C2017		ECEA0JK221	E.CAPACITOR 6.3V 220U	1	
C2018		ECEA1CK100	E.CAPACITOR 16V 10U	1	
C2019		ECEA1HKN2R2	E.CAPACITOR 50V 2.2U	1	
C2020		VCYD1E473KR	S.CAPACITOR 25V 0.047U	1	
C2022		ECEA1HKN2R2	E.CAPACITOR 50V 2.2U	1	
C2024		ECQV1H104JZ	P.CAPACITOR 50V 0.1U	1	
C2025		ECQV1H683JZ	P.CAPACITOR 50V 0.068U	1	
C2026		ECQV1H224JZ	P.CAPACITOR 50V 0.22U	1	
C2027		ECEA1HKR47	E.CAPACITOR 50V 0.47U	1	
C2028		ECQB1H333JZ	P.CAPACITOR 50V 0.033U	1	
C2029		ECEA0JK470	E.CAPACITOR 6.3V 47U	1	
C2030		ECEA1CK100	E.CAPACITOR 16V 10U	1	
C2031		ECQV1H104JZ	P.CAPACITOR 50V 0.1U	1	
C2032		ECEA1HKN010	E.CAPACITOR 50V 1U	1	

Ref.No.		Part No.	Part Name & Description	Pcs	Remarks
C2033		ECUM1H103ZFN	C.CAPACITOR CH 50V 0.01U	1	
C2034		ECEA0JK330	E.CAPACITOR 6.3V 33U	1	
C2050		ECEA0JK221	E.CAPACITOR 6.3V 220U	1	
C2101-03		ECQB1H333JZ	P.CAPACITOR 50V 0.033U	3	
C2104-06		ECEA1HK2R2	E.CAPACITOR 50V 2.2U	3	
C2107,08		VCYD1E333KR	S.CAPACITOR 25V 0.033U	2	
C2111		ECEA1CK101	E.CAPACITOR 16V 100U	1	
C2115		ECEA1CK470	E.CAPACITOR 16V 47U	1	
C2116		ECEA1EU221	E.CAPACITOR 25V 220U	1	
C2118		VCYD1E333KR	S.CAPACITOR 25V 0.033U	1	
C2121		ECQV1H184JZ	P.CAPACITOR 50V 0.18U	1	
C2201		ECEA1CK100	E.CAPACITOR 16V 10U	1	
C2203		ECQV1H104JZ	P.CAPACITOR 50V 0.1U	1	
C2204-06		ECEA1HK0R1	E.CAPACITOR 50V 0.1U	3	
C2207		ECQV1H104JZ	P.CAPACITOR 50V 0.1U	1	
C2208-10		ECEA1VKN4R7	E.CAPACITOR 35V 4.7U	3	
C2211		ECQB1H473JH	P.CAPACITOR 50V 0.047U	1	
C2212		ECEA0JK101U	E.CAPACITOR 6.3V 100U	1	
C2213		ECEA1CK100	E.CAPACITOR 16V 10U	1	
C2301		ECEA1CK100	E.CAPACITOR 16V 10U	1	
C2302		VCYD1E473KR	S.CAPACITOR 25V 0.047U	1	
C2303		ECUM1H562KBN	C.CAPACITOR CH 50V 5600P	1	
C2304		ECEA1HKR47	E.CAPACITOR 50V 0.47U	1	
C2305		ECEA1HKN010	E.CAPACITOR 50V 1U	1	
C2501		ECEA1CK100	E.CAPACITOR 16V 10U	1	
C2502		ECUM1H220JCN	C.CAPACITOR CH 50V 22P	1	
C2504		ECEA1HKN010	E.CAPACITOR 50V 1U	1	
C2505		ECEA0JK470	E.CAPACITOR 6.3V 47U	1	
C2506		ECEA1HK010	E.CAPACITOR 50V 1U	1	
C2507		ECQB1H103JZ	P.CAPACITOR 50V 0.01U	1	
C2508		ECEA0JK470	E.CAPACITOR 6.3V 47U	1	
C2509		ECUM1H181JCN	C.CAPACITOR CH 50V 180P	1	
C3001		ECEA1CK470	E.CAPACITOR 16V 47U	1	
C3002		ECEA0JU471	E.CAPACITOR 6.3V 470U	1	
C3003,04		ECUM1H103ZFN	C.CAPACITOR CH 50V 0.01U	2	
C3010		ECUM1H151JCN	C.CAPACITOR CH 50V 150P	1	
C3011		ECUM1H330JCN	C.CAPACITOR CH 50V 33P	1	
C3012		ECUM1H681KBN	C.CAPACITOR CH 50V 680P	1	
C3013		ECEA1HKN010	E.CAPACITOR 50V 1U	1	
C3014		ECUM1H330JCN	C.CAPACITOR CH 50V 33P	1	
C3015		VCYD1E103KR	S.CAPACITOR 25V 0.01U	1	
C3016		ECEA0JK470	E.CAPACITOR 6.3V 47U	1	
C3019		ECUM1H220JCN	C.CAPACITOR CH 50V 22P	1	
C3027		ECUM1H181JCN	C.CAPACITOR CH 50V 180P	1	
C3053		ECEA0JK101U	E.CAPACITOR 6.3V 100U	1	
C3064		ECQB1H103JZ	P.CAPACITOR 50V 0.01U	1	
C3065		ECUM1H103ZFN	C.CAPACITOR CH 50V 0.01U	1	
C3067,68		ECUM1H103ZFN	C.CAPACITOR CH 50V 0.01U	2	
C3070		ECUM1H103ZFN	C.CAPACITOR CH 50V 0.01U	1	
C3071		ECUM1H102KBN	C.CAPACITOR CH 50V 1000P	1	
C3076		ECUM1H180JCN	C.CAPACITOR CH 50V 18P	1	
C3081		ECEA1CK220	E.CAPACITOR 16V 22U	1	
C3101		ECEA0JK470	E.CAPACITOR 6.3V 47U	1	
C3102		ECEA1CK470	E.CAPACITOR 16V 47U	1	
C3103,04		ECUM1H332KBN	C.CAPACITOR CH 50V 3300P	2	
C3105		ECEA1CK100	E.CAPACITOR 16V 10U	1	
C3808		ECUM1H332KBN	C.CAPACITOR CH 50V 3300P	1	
C3809		ECQB1H332JZ	P.CAPACITOR 50V 0.27U	1	
C3810		ECEA1HK010	E.CAPACITOR 50V 1U	1	
C3811		ECUM1H103ZFN	C.CAPACITOR CH 50V 0.01U	1	
C3812		ECUN1H821KBN	C.CAPACITOR CH 50V 820U	1	
C3813		ECUM1H103ZFN	C.CAPACITOR CH 50V 0.01U	1	
C3814		ECEA0JK101U	E.CAPACITOR 6.3V 100U	1	
C3815,16		ECUM1H103ZFN	C.CAPACITOR CH 50V 0.01U	2	
C3817		ECUM1H470JCN	C.CAPACITOR CH 50V 47P	1	
C3818,19		ECUM1H103ZFN	C.CAPACITOR CH 50V 0.01U	2	
C3820		ECUM1H560JCN	C.CAPACITOR CH 50V 56P	1	
C3821		ECUM1H103ZFN	C.CAPACITOR CH 50V 0.01U	1	
C3822		ECUM1H560JCN	C.CAPACITOR CH 50V 56P	1	
C3901,02		ECEA1CK330	E.CAPACITOR 16V 33U	2	
C3903		ECEA1HK010	E.CAPACITOR 50V 1U	1	
C3904-06		ECEA1CK470	E.CAPACITOR 16V 47U	3	
C3907,08		ECEA1HK2R2	E.CAPACITOR 50V 2.2U	2	
C3909		ECEA1HKR47	E.CAPACITOR 50V 0.47U	1	
C3914		ECUM1H222KBN	C.CAPACITOR CH 50V 2200P	1	

Ref.No.		Part No.	Part Name & Description	Pcs	Remarks
C3916		ECUX1H471KBN	C.CAPACITOR CH 50V 470P	1	
C4001		ECQB1H103JZ	P.CAPACITOR 50V 0.01U	1	
C4002		ECEA16M33	E.CAPACITOR 16V 33U	1	
C4003		ECKF1H102ZF	C.CAPACITOR 50V 1000P	1	
C4004		ECQP1222JZ	P.CAPACITOR 0.0022U	1	
C4005		ECCD2H121K	C.CAPACITOR 500V 120P	1	
C4006		ECEA1CK470	E.CAPACITOR 16V 47U	1	
C4007		ECEA1CK330	E.CAPACITOR 16V 33U	1	
C4008		ECEA1HK010	E.CAPACITOR 50V 1U	1	
C4009		ECEA1EK4R7	E.CAPACITOR 25V 4.7U	1	
C4011		ECQB1H223JZ	P.CAPACITOR 50V 0.022U	1	
C4012		ECEA1CK100	E.CAPACITOR 16V 10U	1	
C4013		ECUM1H681JN	C.CAPACITOR CH 50V 680P	1	
C4014		ECUM1H182KBN	C.CAPACITOR CH 50V 1800P	1	
C4015		ECEA16M10R	E.CAPACITOR 16V 10.U	1	
C4016		ECUM1H102KBN	C.CAPACITOR CH 50V 1000P	1	
C4017		ECEA10M47	E.CAPACITOR 10V 47U	1	
C4018		ECQB1H822JZ	P.CAPACITOR 50V 8200P	1	
C4020		ECUM1H102KBN	C.CAPACITOR CH 50V 1000P	1	
C4021		ECEA1AK101	E.CAPACITOR 10V 100U	1	
C4022		ECUM1H102KBN	C.CAPACITOR CH 50V 1000P	1	
C4023		ECUN1H221JCN	C.CAPACITOR CH 50V 220P	1	
C4024,25		ECUM1H101JCN	C.CAPACITOR CH 50V 100P	2	
C4026		ECUM1H104ZFN	C.CAPACITOR CH 50V 0.1U	1	
C4029		ECQB1H123JZ	P.CAPACITOR 50V 0.012U	1	
C4032		ECEA1CK470	E.CAPACITOR 16V 47U	1	
C4033		ECQB1H102JH	P.CAPACITOR 50V 1000P	1	
C4034		ECUM1H681KBN	C.CAPACITOR CH 50V 680P	1	
C4036		ECUX1H681JN	C.CAPACITOR CH 50V 680P	1	
C6001,02		ECEA0JK470	E.CAPACITOR 6.3V 47U	2	
C6005		ECEA1CK330	E.CAPACITOR 16V 33U	1	
C6006		ECEA0JK330	E.CAPACITOR 6.3V 33U	1	
C6007		VCYD1C104MR1	S.CAPACITOR 16V 0.1U	1	
C6008		ECUM1H103ZFN	C.CAPACITOR CH 50V 0.01U	1	
C6010		ECUM1H332KBN	C.CAPACITOR CH 50V 3300P	1	
C6011,12		ECUM1H271JCN	C.CAPACITOR CH 50V 270P	2	
C6013		ECKF1H103ZF	C.CAPACITOR 50V 0.01U	1	
C6014		ECEA1CK220	E.CAPACITOR 16V 22U	1	
C6015		ECEA1CK330	E.CAPACITOR 16V 33U	1	
C6025		ECUM1H103ZFN	C.CAPACITOR CH 50V 0.01U	1	
C6101		ECUM1H103ZFN	C.CAPACITOR CH 50V 0.01U	1	
C6102		ECQV1H104JZ	P.CAPACITOR 50V 0.1U	1	
C6103		ECEA0JK470	E.CAPACITOR 6.3V 47U	1	
C6104		ECUM1H181JCN	C.CAPACITOR CH 50V 180P	1	
C6105		ECUM1H101JCN	C.CAPACITOR CH 50V 100P	1	
C6106		ECUM1H150JCN	C.CAPACITOR CH 50V 15P	1	
C6201		ECUM1E563KBX	C.CAPACITOR CH 25V 0.056U	1	
C6801		ECEA1CK100	E.CAPACITOR 16V 10U	1	
C7401		ECEA0JU221	E.CAPACITOR 6.3V 220U	1	
C7402		EECS5R5V473	E.CAPACITOR 5.5V 0.047	1	
C7408		ECUM1H101JCN	C.CAPACITOR CH 50V 100P	1	
C7409		ECUM1H104ZFN	C.CAPACITOR CH 50V 0.1U	1	
C7421		ECUM1H103ZFN	C.CAPACITOR CH 50V 0.01U	1	
C7422		ECUM1H272KBN	C.CAPACITOR CH 50V 2700P	1	
C7651		ECEA1CKN100	E.CAPACITOR 16V 10U	1	
C7653		ECQB1H392JH	P.CAPACITOR 50V 3900P	1	
C7654		ECQB1H103JH	P.CAPACITOR 50V 0.01U	1	
C7655,56		ECEA1HK010	E.CAPACITOR 50V 1U	2	
C7657		ECUM1H103ZFN	C.CAPACITOR CH 50V 0.01U	1	
C7658		ECQP1H562JZ	P.CAPACITOR 50V 5600P	1	
C7659		ECQB1H272JH	P.CAPACITOR 50V 2700P	1	
C7661		ECQV1H104JZ	P.CAPACITOR 50V 0.1U	1	
C7662		ECQV1H683JZ	P.CAPACITOR 50V 0.068U	1	
C7663		ECQV1H823JZ	P.CAPACITOR 50V 0.082U	1	
C7664		ECQB1H273JH	P.CAPACITOR 50V 0.027U	1	
C7665,66		ECUM1H103ZFN	C.CAPACITOR CH 50V 0.01U	2	
C7667		ECEA1HKA100	E.CAPACITOR 50V 10U	1	
C7675		ECEA1HKN010	E.CAPACITOR 50V 1U	1	
C7676,77		ECUM1H103ZFN	C.CAPACITOR CH 50V 0.01U	2	
C7678		ECEA1CK100	E.CAPACITOR 16V 10U	1	
C7680		ECEA1HK010	E.CAPACITOR 50V 1U	1	
C7681,82		ECUM1H103ZFN	C.CAPACITOR CH 50V 0.01U	2	

Ref.No.		Part No.	Part Name & Description	Pcs	Remarks
D301		MA4091M	DIODE	1	
D710		MA3100L	DIODE	1	
D771		MA151WK	DIODE	1	
D772		MA165	DIODE	1	
D773		MA151K	DIODE	1	
D805		MA165	DIODE	1	
D1001,02		MA165	DIODE	2	
D2003,04		MA165	DIODE	2	
D2007~10		MA165	DIODE	4	
D2403		MA165	DIODE	1	
D2405,06		MA165	DIODE	2	
D2407		MA204WK	DIODE	1	
D2409		MA204WA	DIODE	1	
D2501		MA165	DIODE	1	
D3001		MA165	DIODE	1	
D3009		MA165	DIODE	1	
D3101		MA165	DIODE	1	
D3102		MA29WA	DIODE	1	
D3901,02		MA165	DIODE	2	
D4003		MA165	DIODE	1	
D6001		MA4051	DIODE	1	
D6002-04		MA165	DIODE	3	
D6005		ERA15-01	DIODE	1	
D6006		MA165	DIODE	1	
D6008		MA723	DIODE	1	
D6009		MA4150L	DIODE	1	
D6023		MA165	DIODE	1	
D6801		MA165	DIODE	1	
D7401,02		MA723	DIODE	2	
D7601		MA151A	DIODE	1	
D7602		MA3082M	DIODE	1	
DL801		VLD0089	DELAY	1	
DL803		EFDWF124A13A	DELAY	1	
F6001		VSF0077	FUSE	1	<!>
FL301		ELB4M022	FILTER	1	
FL302		VLF0499	FILTER	1	
FL303		VLF0727	FILTER	1	
FL801		ELB4W002	FILTER	1	
IC301		VEFH03D	HIC	1	
IC302		AN3495K	IC	1	
IC303		MSM6965-3RS	IC	1	
IC701		M51366SP	IC	1	
IC801		VEFH04F	P.C.BOARD	1	
IC802		M52055P	IC	1	
IC2001		MN6740VCQK	IC	1	
IC2101		BA6435S	IC	1	
IC2201		AN3814K	IC	1	
IC2301		AN6561L	IC	1	
IC2302		XRA10393N	IC	1	
IC2501		CF77384NS	IC	1	
IC2502		BA6305F	IC	1	
IC3101		BA7004	IC	1	
IC3801		M52063SP	IC	1	
IC3901		LA7150	IC	1	
IC4001		BA7766AS	IC	1	
IC4002		UPD4066BG	IC	1	
IC6003		MN12821R	IC	1	(R)
IC6801		MN15522VMS	IC	1	
IC7651		AN5421	IC	1	
IC7652		AN5043	IC	1	
IC7653		MN4066BS	IC	1	

Ref.No.		Part No.	Part Name & Description	Pcs	Remarks
L301		VLQEL05F101K	COIL 100UH	1	
L302		VLQEL05F220K	COIL 22UH	1	
L303		VLQEL05F101K	COIL 100UH	1	
L304		VLQEL05F121K	COIL 120UH	1	
L305		VLQEL05F680K	COIL 68UH	1	
L306		VLQEL05F101K	COIL 100UH	1	
L307		VLQEL05F151K	COIL 150UH	1	
L308		VLQEL05F270K	COIL 27UH	1	
L309,10		VLQEL05F101K	COIL 100UH	2	
L701		ELESP680KA	COIL 68UH	1	
L713,14		VLQ0305J1R2	COIL 1.2UH	2	
L717,18		ELESP680KA	COIL 68UH	2	
L719		ELESP150KA	COIL 15UH	1	
L720		ELESP680KA	COIL 68UH	1	
L801		VLQEL05F101K	COIL 100UH	1	
L802,03		VLQEL05F150K	COIL 15UH	2	
L805		VLQEL05F101K	COIL 100UH	1	
L806		VLQEL05F681K	COIL 680UH	1	
L808		VLQEL05F470K	COIL 47UH	1	
L809		VLQEL05F331K	COIL 330UH	1	
L810		VLQEL05F101K	COIL 100UH	1	
L811		VLQEL05F470K	COIL 47UH	1	
L812		VLQEL05F681K	COIL 680UH	1	
L820		VLQEL05F101K	COIL 100UH	1	
L821		VLQEL05F150K	COIL 15UH	1	
L822		VLQ0213K150T	COIL 15H	1	
L2002		VLP0074	COIL	1	
L2003		ELESP101KA	COIL	1	
L2101		ELESP102KA	COIL 1000UH	1	
L3001-03		ELESP101KA	COIL	3	
L3005		ELESP120KA	COIL 12UH	1	
L3006		ELESP6R8KA	COIL	1	
L3007		ELESP101KA	COIL	1	
L3008		ELESP3R3KA	COIL	1	
L3011		ELESP5R6KA	COIL H	1	
L3101		VLQEL05F101K	COIL 100UH	1	
L3805		VLQEL05F101K	COIL 100UH	1	
L3901		VLQEL05F1R0K	COIL 1UH	1	
L3902		VLQEL05F2R7K	COIL 2.7UH	1	
L4001		VLQEL07F822J	COIL 8200UH	1	
L4002		ELESP471KA	COIL	1	
L6101		VLQEL05F101K	COIL 100UH	1	
L7401		ELESP1R0KA	COIL 1UH	1	
L7402		ELESP101KA	COIL	1	
L7404		ELESP1R0KA	COIL 1UH	1	
P001		VJS1237T	CONNECTOR (FEMALE)	1	
P006		VJS1902	CONNECTOR (FEMALE)	1	
P501		VJS2382T	CONNECTOR (FEMALE)	1	
P1001		VJS2571A013	CONNECTOR (FEMALE)	1	
P1502		VJS1141T	CONNECTOR (FEMALE)	1	
P2001		VJP1932T	CONNECTOR (MALE)	1	
P2001		VJS1932T	CONNECTOR (FEMALE)	1	
P2201		VJP1237T	CONNECTOR(MALE) 10P	1	
P2201		VJS1237T	CONNECTOR (FEMALE)	1	
P3001		VJP1931T	CONNECTOR (MALE)	1	
P3001		VJS2382T	CONNECTOR (FEMALE)	1	
P3902		VJS1469	CONNECTOR(FEMALE)	1	
P4001		VJP2622	CONNECTOR	1	
P4002		VJP1229T	CONNECTOR(MALE) 2P	1	
P4002		VJS1229T	CONNECTOR (FEMALE)	1	
P4003		VJP1231T	CONNECTOR(MALE) 4P	1	
P4003		VJS1231T	CONNECTOR (FEMALE)	1	
P6001		VJS2571A012	CONNECTOR (FEMALE)	1	
P6002		VJS2571A004	CONNECTOR (FEMALE)	1	
P6202		VJS1231T	CONNECTOR (FEMALE)	1	
P7401		VJS1662	CONNECTOR (FEMALE)	1	
P7402		VJS2571A015	CONNECTOR (FEMALE)	1	
PK701		VJR0231	PACK PIN	1	

Ref.No.		Part No.	Part Name & Description	Pcs	Remarks
PK702,03		VJR0406	PACK PIN	2	
PK704		VJR0231	PACK PIN	1	
PK2201		VJR0452	PACK PIN	1	
PK2202		VJR0348	PACK PIN	1	
PK3901		VJR0348	PACK PIN	1	
PK3902		VJR0523	PACK PIN	1	
PK3903		VJR0348	PACK PIN	1	
PK3904		VJR0416	PACK PIN	1	
PK6101		VJR0277	PACK PIN	1	
Q301		MSB709	TRANSISTOR	1	(Q,R,S)
Q302		MSC2295	TRANSISTOR	1	(B,C)
Q303		MSC2295	TRANSISTOR	1	(B,C)
Q304		MSD601	TRANSISTOR	1	(Q,R,S)
Q703		2SD601	TRANSISTOR	1	(S,T)
Q712		2SD638	TRANSISTOR	1	
Q713		2SD1328	TRANSISTOR CHIP	1	(S,T)
Q771		2SD601	TRANSISTOR	1	(S,T)
Q772		2SD601	TRANSISTOR CHIP	1	(S,T)
Q801		MSD601	TRANSISTOR	1	(Q,R,S)
Q802		MSC2295	TRANSISTOR	1	(B,C)
Q804		MSB709	TRANSISTOR	1	(Q,R,S)
Q2001		MSD601	TRANSISTOR	1	(Q,R,S)
Q2002		2SD1996	TRANSISTOR	1	(S)
Q2003		MSB709	TRANSISTOR	1	
Q2301		MSD601	TRANSISTOR	1	(Q,R,S)
Q2302,03		MSB709	TRANSISTOR	2	(Q,R,S)
Q3001		MSC2295	TRANSISTOR	1	
Q3003		MSD601	TRANSISTOR	1	
Q3004		MSB709	TRANSISTOR	1	(Q,R,S)
Q3006		MSC2295	TRANSISTOR	1	
Q3007		MSB709	TRANSISTOR	1	(Q,R,S)
Q3101		MSD601	TRANSISTOR	1	
Q4001		MSD602	TRANSISTOR	1	(R)
Q4002		2SA1309	TRANSISTOR	1	
Q6001		2SD893	TRANSISTOR	1	
Q6002,03		2SD1994	TRANSISTOR	2	(S)
Q6004		2SD1992	TRANSISTOR	1	
Q6006		2SB1321	TRANSISTOR	1	
Q6007		MSB710	TRANSISTOR	1	(R,S)
Q6008		2SD1273	TRANSISTOR	1	(P)
Q6010		2SD1991A	TRANSISTOR	1	
Q6011		MSB709	TRANSISTOR	1	
Q6101		2SC2206	TRANSISTOR	1	(B,C)
QR301		MRN1403	TRANSISTOR-RESISTOR	1	
QR302-04		MRN1403	TRANSISTOR-RESISTOR	3	
QR701,02		UN2213	TRANSISTOR-RESISTOR	2	
QR713		UN2211	TRANSISTOR-RESISTOR	1	
QR801		MRN1403	TRANSISTOR-RESISTOR	1	
QR1001		MRN1404	TRANSISTOR-RESISTOR	1	
QR2002		DTC363EK	COMBI.TR-R	1	
QR2004		2SD1676	TRANSISTOR-RESISTOR	1	
QR2005		MRN1404	TRANSISTOR-RESISTOR	1	
QR2402,03		MRN2403	TRANSISTOR-RESISTOR	2	
QR2405		MRN1404	TRANSISTOR-RESISTOR	1	
QR2502		DTC363EK	COMBI.TR-R	1	
QR3004		MRN2402	TRANSISTOR-RESISTOR	1	
QR3005		MRN1404	TRANSISTOR-RESISTOR	1	
QR3006,07		DTC363EK	COMBI.TR-R	2	
QR3008		MRN1403	TRANSISTOR-RESISTOR	1	
QR3010		MRN1404	TRANSISTOR-RESISTOR	1	
QR3801		MRN2404	TRANSISTOR-RESISTOR	1	
QR3802		MRN1404	TRANSISTOR-RESISTOR	1	
QR4001,02		MRN1404	TRANSISTOR-RESISTOR	2	
QR6002		UN2119	TRANSISTOR-RESISTOR	1	
QR6003		MRN2404	TRANSISTOR-RESISTOR	1	
QR6004		MRN1404	TRANSISTOR-RESISTOR	1	
QR6006		MRN1404	TRANSISTOR-RESISTOR	1	
QR6007		MRN1403	TRANSISTOR-RESISTOR	1	
QR6011,12		MRN1403	TRANSISTOR-RESISTOR	2	

Ref.No.		Part No.	Part Name & Description	Pcs	Remarks
QR6201		MRN2404	TRANSISTOR-RESISTOR	1	
QR6202		MRN1404	TRANSISTOR-RESISTOR	1	
QR7401		MRN1402	TRANSISTOR-RESISTOR	1	
QR7499		MRN1403	TRANSISTOR-RESISTOR	1	
QR7601		MRN1404	TRANSISTOR-RESISTOR	1	
			RESISTORS		
R301		ERJ6GMYJ122	M.RESISTOR CH 1/10W 1.2K	1	
R302		ERJ6GMYJ391	M.RESISTOR CH 1/10W 390	1	
R303		ERJ6GMYJ103	M.RESISTOR CH 1/10W 10K	1	
R304		ERJ6GMYJ102	M.RESISTOR CH 1/10W 1K	1	
R305		ERJ6GMYJ824	M.RESISTOR CH 1/10W 820K	1	
R306		ERJ6GMYJ152	M.RESISTOR CH 1/10W 1.5K	1	
R307		ERJ6GMYJ102	M.RESISTOR CH 1/10W 1K	1	
R308		ERJ6GMYJ123	M.RESISTOR CH 1/10W 12K	1	
R309		ERJ6GMYJ272	M.RESISTOR CH 1/10W 2.7K	1	
R310		ERJ6GMYJ103	M.RESISTOR CH 1/10W 10K	1	
R311		ERJ6GMYJ392	M.RESISTOR CH 1/10W 3.9K	1	
R312		ERJ6GMYJ472	M.RESISTOR CH 1/10W 4.7K	1	
R313		ERJ6GMYJ332	M.RESISTOR CH 1/10W 3.3K	1	
R314		ERJ6GMYJ103	M.RESISTOR CH 1/10W 10K	1	
R315		ERJ6GMYJ222	M.RESISTOR CH 1/10W 2.2K	1	
R317		ERJ6GMYJ471	M.RESISTOR CH 1/10W 470	1	
R318		ERJ6GMYJ562	M.RESISTOR CH 1/10W 5.6K	1	
R319		ERJ6GMYJ273	M.RESISTOR CH 1/10W 27K	1	
R320		ERJ6GMYJ102	M.RESISTOR CH 1/10W 1K	1	
R325		ERJ6GMYJ151	M.RESISTOR CH 1/10W 150	1	
R326		ERJ6GMYJ822	M.RESISTOR CH 1/10W 8.2K	1	
R327		ERJ6GMYJ332	M.RESISTOR CH 1/10W 3.3K	1	
R328		ERJ6GMYJ272	M.RESISTOR CH 1/10W 2.7K	1	
R329		ERJ6GMYJ103	M.RESISTOR CH 1/10W 10K	1	
R330		ERJ6GMYJ183	M.RESISTOR CH 1/10W 18K	1	
R331		ERJ6GMYJ561	M.RESISTOR CH 1/10W 560	1	
R332		ERJ6GMYJ222	M.RESISTOR CH 1/10W 2.2K	1	
R334,35		ERJ6GMYJ102	M.RESISTOR CH 1/10W 1K	2	
R338		ERJ6GMYJ124	M.RESISTOR CH 1/10W 120K	1	
R716		ERJ6GEYJ272	M.RESISTOR CH 1/10W 2.7K	1	
R717		ERJ6GEYJ332	M.RESISTOR CH 1/10W 3.3K	1	
R718		ERJ6GEYJ754	M.RESISTOR CH 1/10W 750K	1	
R719		ERJ6GEYJ682	M.RESISTOR CH 1/10W 6.8K	1	
R720		ERJ6GEYJ822	M.RESISTOR CH 1/10W 8.2K	1	
R721		ERJ6GEYJ332	M.RESISTOR CH 1/10W 3.3K	1	
R723		ERJ6GEYJ183	M.RESISTOR CH 1/10W 180K	1	
R724		ERJ6GEYJ101	M.RESISTOR CH 1/10W 100	1	
R725		ERJ6GEYJ182	M.RESISTOR CH 1/10W 1.8K	1	
R726		ERJ6GEYJ472	M.RESISTOR CH 1/10W 4.7K	1	
R727		ERJ6GEYJ471	M.RESISTOR CH 1/10W 470	1	
R728		ERDS2TJ471	C.RESISTOR 1/4W 470	1	
R729,30		ERJ6GEYJ331	M.RESISTOR CH 1/10W 330	2	
R737		ERJ6GEYJ274	M.RESISTOR CH 1/10W 270K	1	
R738		ERJ6GEYJ334	M.RESISTOR CH 1/10W 330K	1	
R739		ERJ6GEYJ681	M.RESISTOR CH 1/10W 680	1	
R740		ERJ6GEYJ473	M.RESISTOR CH 1/10W 47K	1	
R743		ERJ6GEYJ470	M.RESISTOR CH 1/10W 47	1	
R744		ERJ6GEYJ821	M.RESISTOR CH 1/10W 820	1	
R745		ERJ6GEYJ331	M.RESISTOR CH 1/10W 330	1	
R746		ERDS2TJ181	C.RESISTOR 1/4W 180	1	
R747		ERJ6GEYJ471	M.RESISTOR CH 1/10W 470	1	
R750		ERJ6GEYJ182	M.RESISTOR CH 1/10W 1.8K	1	
R751		ERJ6GEYJ562	M.RESISTOR CH 1/10W 5.6K	1	
R756		ERJ6GEYJ103	M.RESISTOR CH 1/10W 10K	1	
R757,58		ERJ6GEYJ102	M.RESISTOR CH 1/10W 1K	2	
R763		ERJ6GEYJ103	M.RESISTOR CH 1/10W 10K	1	
R764		ERJ6GEYJ822	M.RESISTOR CH 1/10W 8.2K	1	
R772		ERJ6GEYJ271	M.RESISTOR CH 1/10W 270	1	
R773		ERJ6GEYJ472	M.RESISTOR CH 1/10W 4.7K	1	
R774		ERJ6GEYJ562	M.RESISTOR CH 1/10W 5.6K	1	
R792		ERDS2TJ120	C.RESISTOR 1/4W 12	1	
R795		ERJ6GEYJ222	M.RESISTOR CH 1/10W 2.2K	1	
R801		ERJ6GMYJ271	M.RESISTOR CH 1/10W 270	1	
R802		ERJ6GMYJ122	M.RESISTOR CH 1/10W 1.2K	1	
R803,04		ERJ6GMYJ103	M.RESISTOR CH 1/10W 10K	2	
R805,06		ERJ6GMYJ471	M.RESISTOR CH 1/10W 470	2	

Ref.No.		Part No.	Part Name & Description	Pcs	Remarks
R807		ERJ6GMYJ122	M.RESISTOR CH 1/10W 1.2K	1	
R808		ERJ6GMYJ681	M.RESISTOR CH 1/10W 680	1	
R809		ERJ6GMYJ152	M.RESISTOR CH 1/10W 1.5K	1	
R810		ERJ6GMYJ102	M.RESISTOR CH 1/10W 1K	1	
R815		ERJ6GMYJ103	M.RESISTOR CH 1/10W 10K	1	
R816		ERJ6GMYJ822	M.RESISTOR CH 1/10W 8.2K	1	
R817,18		ERJ6GMYJ102	M.RESISTOR CH 1/10W 1K	2	
R819		ERJ6GMYJ182	M.RESISTOR CH 1/10W 1.8K	1	
R820		ERJ6GMYJ222	M.RESISTOR CH 1/10W 2.2K	1	
R821		ERJ6GMYJ273	M.RESISTOR CH 1/10W 27K	1	
R822		ERJ6GMYJ183	M.RESISTOR CH 1/10W 18K	1	
R824		ERJ6GMYJ102	M.RESISTOR CH 1/10W 1K	1	
R825		ERJ6GMYJ182	M.RESISTOR CH 1/10W 1.8K	1	
R827		ERJ6GMYJ333	M.RESISTOR CH 1/10W 33K	1	
R828		ERJ6GMYJ223	M.RESISTOR CH 1/10W 22K	1	
R831		ERJ6GMYJ821	M.RESISTOR CH 1/10W 820	1	
R841-43		ERJ6GMYJ272	M.RESISTOR CH 1/10W 2.7K	3	
R844,45		ERJ6GMYJ122	M.RESISTOR CH 1/10W 1.2K	2	
R846,47		ERJ6GMYJ271	M.RESISTOR CH 1/10W 270	2	
R2001,02		ERJ6GMYJ102	M.RESISTOR CH 1/10W 1K	2	
R2004,05		ERJ6GMYJ223	M.RESISTOR CH 1/10W 22K	2	
R2006		ERJ6GMY0R00	M.RESISTOR CH 1/10W 0.00	1	
R2007		ERJ6GMYJ332	M.RESISTOR CH 1/10W 3.3K	1	
R2008		ERJ6GMYJ102	M.RESISTOR CH 1/10W 1K	1	
R2009		ERJ6GMYJ393	M.RESISTOR CH 1/10W 39K	1	
R2010		ERJ6GMYJ103	M.RESISTOR CH 1/10W 10K	1	
R2011		ERJ6GMYJ152	M.RESISTOR CH 1/10W 1.5K	1	
R2012		ERJ6GMYJ221	M.RESISTOR CH 1/10W 220	1	
R2013		ERJ6GMYJ103	M.RESISTOR CH 1/10W 10K	1	
R2014		ERJ6GMYJ824	M.RESISTOR CH 1/10W 820K	1	
R2015,16		ERJ6GMYJ223	M.RESISTOR CH 1/10W 22K	2	
R2017		ERJ6GMYJ222	M.RESISTOR CH 1/10W 2.2K	1	
R2018		ERJ6GMYJ221	M.RESISTOR CH 1/10W 220	1	
R2019		ERJ6GMYJ124	M.RESISTOR CH 1/10W 120K	1	
R2020		ERJ6GMYJ821	M.RESISTOR CH 1/10W 820	1	
R2021		ERJ6GMYJ562	M.RESISTOR CH 1/10W 5.6K	1	
R2022		ERJ6GMYJ272	M.RESISTOR CH 1/10W 2.7K	1	
R2023		ERJ6GMYJ222	M.RESISTOR CH 1/10W 2.2K	1	
R2024		ERJ6GMYJ823	M.RESISTOR CH 1/10W 82K	1	
R2025		ERJ6GMYG562	M.RESISTOR CH 1/10W 5.6K	1	
R2026		ERJ6GMYG392	M.RESISTOR CH 1/10W 3.9K	1	
R2027		ERJ6GMYJ473	M.RESISTOR CH 1/10W 47K	1	
R2028		ERJ6GMYJ332	M.RESISTOR CH 1/10W 3.3K	1	
R2029		ERJ6GMYJ473	M.RESISTOR CH 1/10W 47K	1	
R2030		ERJ6GMYJ123	M.RESISTOR CH 1/10W 12K	1	
R2031		ERJ6GMYJ392	M.RESISTOR CH 1/10W 3.9K	1	
R2032		ERDS2TJ471	C.RESISTOR 1/4W 470	1	
R2033		ERJ6GMYJ824	M.RESISTOR CH 1/10W 820K	1	
R2034		ERJ6GMYJ104	M.RESISTOR CH 1/10W 100K	1	
R2035,36		ERJ6GMYJ223	M.RESISTOR CH 1/10W 22K	2	
R2037		ERJ6GMYJ103	M.RESISTOR CH 1/10W 10K	1	
R2038		ERJ6GMYJ102	M.RESISTOR CH 1/10W 1K	1	
R2040		ERJ6GMYJ471	M.RESISTOR CH 1/10W 470	1	
R2051		ERJ6GMYJ103	M.RESISTOR CH 1/10W 10K	1	
R2101-03		ERDS2TJ560	C.RESISTOR 1/4W 56	3	
R2104		ERX12SJR47E	M.RESISTOR 1/2W 0.47	1	
R2105		ERJ6GMYJ102	M.RESISTOR CH 1/10W 1K	1	
R2106		ERJ6GMYG561	M.RESISTOR CH 1/10W 560	1	
R2107		ERJ6GMYG153	M.RESISTOR CH 1/10W 15K	1	
R2108		ERJ6GMYG133	M.RESISTOR CH 1/10W 13K	1	
R2109		ERJ6GMYJ330	M.RESISTOR CH 1/10W 33	1	
R2201		ERDS2TJ122	C.RESISTOR 1/4W 1.2K	1	
R2202-04		ERDS2TJ150	C.RESISTOR 1/4W 15	3	
R2205		ERX12SJR68E	M.RESISTOR 1/2W 0.68	1	
R2301		ERJ6GMYJ103	M.RESISTOR CH 1/10W 10K	1	
R2302		ERJ6GMYJ152	M.RESISTOR CH 1/10W 1.5K	1	
R2303		ERJ6GMYJ393	M.RESISTOR CH 1/10W 39K	1	
R2304		ERJ6GMYJ221	M.RESISTOR CH 1/10W 220	1	
R2305		ERJ6GMYJ103	M.RESISTOR CH 1/10W 10K	1	
R2306		ERJ6GMYJ102	M.RESISTOR CH 1/10W 1K	1	
R2307		ERJ6GMYJ473	M.RESISTOR CH 1/10W 47K	1	
R2308		ERJ6GMYJ562	M.RESISTOR CH 1/10W 5.6K	1	
R2309		ERJ6GMYJ824	M.RESISTOR CH 1/10W 820K	1	
R2310		ERJ6GMYJ223	M.RESISTOR CH 1/10W 22K	1	
R2311		ERJ6GMYJ824	M.RESISTOR CH 1/10W 820K	1	

Ref.No.		Part No.	Part Name & Description	Pcs	Remarks
R2312,13		ERJ6GMYJ223	M.RESISTOR CH 1/10W 22K	2	
R2314,15		ERJ6GMYJ103	M.RESISTOR CH 1/10W 10K	2	
R2316		ERJ6GMYJ473	M.RESISTOR CH 1/10W 47K	1	
R2402		ERJ6GMYJ561	M.RESISTOR CH 1/10W 560	1	
R2403		ERJ6GMYJ103	M.RESISTOR CH 1/10W 10K	1	
R2405		ERJ6GMYJ562	M.RESISTOR CH 1/10W 5.6K	1	
R2501		ERJ6GMYJ223	M.RESISTOR CH 1/10W 22K	1	
R2503		ERJ6GMYJ103	M.RESISTOR CH 1/10W 10K	1	
R2504		ERJ6GMYJ823	M.RESISTOR CH 1/10W 82K	1	
R2505		ERJ6GMYJ221	M.RESISTOR CH 1/10W 220	1	
R2506		ERJ6GMYJ332	M.RESISTOR CH 1/10W 3.3K	1	
R3001		ERJ6GMYJ103	M.RESISTOR CH 1/10W 10K	1	
R3002		ERJ6GMYJ682	M.RESISTOR CH 1/10W 6.8K	1	
R3003		ERJ6GMYJ472	M.RESISTOR CH 1/10W 4.7K	1	
R3019		ERDS2TJ471	C.RESISTOR 1/4W 470	1	
R3022,23		ERJ6GMYJ821	M.RESISTOR CH 1/10W 820	2	
R3027		ERJ6GMYJ562	M.RESISTOR CH 1/10W 5.6K	1	
R3028		ERJ6GMYJ102	M.RESISTOR CH 1/10W 1K	1	
R3029		ERJ6GMYJ272	M.RESISTOR CH 1/10W 2.7K	1	
R3030		ERJ6GMYJ750	M.RESISTOR CH 1/10W 75	1	
R3042		ERJ6GMYJ102	M.RESISTOR CH 1/10W 1K	1	
R3057		ERJ6GMYJ103	M.RESISTOR CH 1/10W 10K	1	
R3060		ERJ6GEYJ223	M.RESISTOR CH 1/10W 22K	1	
R3062		ERJ6GMYJ223	M.RESISTOR CH 1/10W 22K	1	
R3063		ERJ6GMYJ103	M.RESISTOR CH 1/10W 10K	1	
R3071		ERJ6GMYJ222	M.RESISTOR CH 1/10W 2.2K	1	
R3085		ERJ6GMYJ221	M.RESISTOR CH 1/10W 220	1	
R3086		ERJ6GMYJ103	M.RESISTOR CH 1/10W 10K	1	
R3087,88		ERJ6GMYJ104	M.RESISTOR CH 1/10W 100K	2	
R3091		ERDS2TJ102	C.RESISTOR 1/4W 1K	1	
R3094		ERJ6GMY0R00	M.RESISTOR CH 1/10W 0.00	1	
R3095		ERJ6GMYJ102	M.RESISTOR CH 1/10W 1K	1	
R3096		ERDS2TJ102	C.RESISTOR 1/4W 1K	1	
R3101		ERJ6GMYJ102	M.RESISTOR CH 1/10W 1K	1	
R3102		ERJ6GMYJ152	M.RESISTOR CH 1/10W 1.5K	1	
R3103		ERJ6GMYJ392	M.RESISTOR CH 1/10W 3.9K	1	
R3104		ERJ6GMYJ152	M.RESISTOR CH 1/10W 1.5K	1	
R3105		ERJ6GMYJ561	M.RESISTOR CH 1/10W 560	1	
R3812		ERJ6GMYJ223	M.RESISTOR CH 1/10W 22K	1	
R3813		ERJ6GMYJ152	M.RESISTOR CH 1/10W 1.5K	1	
R3814		ERJ6GMYJ183	M.RESISTOR CH 1/10W 18K	1	
R3815		ERJ6GMYJ333	M.RESISTOR CH 1/10W 33K	1	
R3816		ERJ6GMYJ223	M.RESISTOR CH 1/10W 22K	1	
R3817,18		ERJ6GMYJ102	M.RESISTOR CH 1/10W 1K	2	
R3819		ERJ6GMYJ152	M.RESISTOR CH 1/10W 1.5K	1	
R3820		ERJ6GMYJ272	M.RESISTOR CH 1/10W 2.7K	1	
R3821		ERJ6GMYJ122	M.RESISTOR CH 1/10W 1.2K	1	
R3822,23		ERJ6GMYJ681	M.RESISTOR CH 1/10W 680	2	
R3901		ERJ6GEYJ750	M.RESISTOR CH 1/10W 75	1	
R3902		ERDS2TJ750	C.RESISTOR 1/4W 75	1	
R3903,04		ERJ6GEYJ242	M.RESISTOR CH 1/10W 2.4K	2	
R3905		ERJ6GEY0R00	M.RESISTOR CH 1/10W 0	1	
R3906		ERJ6GEYJ273	M.RESISTOR CH 1/10W 27K	1	
R3908		ERJ6GEYJ333	M.RESISTOR CH 1/10W 33K	1	
R3909		ERJ6GEYJ750	M.RESISTOR CH 1/10W 75	1	
R3910		ERDS2TJ750	C.RESISTOR 1/4W 75	1	
R3912		ERJ6GEYJ223	M.RESISTOR CH 1/10W 22K	1	
R3913		ERJ6GEYJ123	M.RESISTOR CH 1/10W 12K	1	
R3916		ERDS2T0	C.RESISTOR 1/4W 0	1	
R4001		ERJ6GMYJ100	M.RESISTOR CH 1/10W 10	1	
R4002		ERJ6GMYJ153	M.RESISTOR CH 1/10W 15K	1	
R4003		ERJ6GMYG223	M.RESISTOR CH 1/10W 22K	1	
R4004		ERJ6GMYJ562	M.RESISTOR CH 1/10W 5.6K	1	
R4007		ERJ6GMYJ221	M.RESISTOR CH 1/10W 220	1	
R4008		ERJ6GMYJ122	M.RESISTOR CH 1/10W 1.2K	1	
R4010		ERJ6GMYJ333	M.RESISTOR CH 1/10W 33K	1	
R4012		ERJ6GMYJ331	M.RESISTOR CH 1/10W 330	1	
R4013		ERJ6GMYJ394	M.RESISTOR CH 1/10W 390K	1	
R4014		ERJ6GMYG133	M.RESISTOR CH 1/10W 13K	1	
R4015		ERJ6GMYJ822	M.RESISTOR CH 1/10W 8.2K	1	
R4016		ERJ6GMYJ105	M.RESISTOR CH 1/10W 1M	1	
R4017		ERJ6GMYJ302	M.RESISTOR CH 1/10W 3K	1	
R4018		ERJ6GMYJ223	M.RESISTOR CH 1/10W 22K	1	
R4019		ERJ6GMYJ563	M.RESISTOR CH 1/10W 56K	1	
R4020		ERJ6GMYJ562	M.RESISTOR CH 1/10W 5.6K	1	

Ref.No.		Part No.	Part Name & Description	Pcs	Remarks
R4021		ERJ6GMYJ103	M.RESISTOR CH 1/10W 10K	1	
R4022		ERJ6GMYJ473	M.RESISTOR CH 1/10W 47K	1	
R4023		ERJ6GMYG473	M.RESISTOR CH 1/10W 47K	1	
R4024,25		ERJ6GMYG104	M.RESISTOR CH 1/10W 100K	2	
R4026		ERJ6GMYJ123	M.RESISTOR CH 1/10W 12K	1	
R4027		ERJ6GMYJ153	M.RESISTOR CH 1/10W 15K	1	
R4028		ERJ6GMYJ102	M.RESISTOR CH 1/10W 1K	1	
R4031		ERJ6GMYG272	M.RESISTOR CH 1/10W 2.7K	1	
R4032		ERJ6GMYG622	M.RESISTOR CH 1/10W 6.2K	1	
R4035		ERJ6GMYJ822	M.RESISTOR CH 1/10W 8.2K	1	
R4036		ERJ6GMYJ562	M.RESISTOR CH 1/10W 5.6K	1	
R4038		ERDS2TJ562	C.RESISTOR 1/4W 5.6K	1	
R4039		ERJ6GMYJ473	M.RESISTOR CH 1/10W 47K	1	
R4040		ERJ6GMYJ103	M.RESISTOR CH 1/10W 10K	1	
R4041		ERJ6GMYJ332	M.RESISTOR CH 1/10W 3.3K	1	
R4042		ERJ6GMYJ681	M.RESISTOR CH 1/10W 680	1	
R4044		ERJ6GMYG103	M.RESISTOR CH 1/10W 10K	1	
R4048		ERJ6GMYJ473	M.RESISTOR CH 1/10W 47K	1	
R4049		ERJ6GEYJ471	M.RESISTOR CH 1/10W 470	1	
R4051		ERJ6GMYJ473	M.RESISTOR CH 1/10W 47K	1	
R6001-03		ERJ6GMYJ101	M.RESISTOR CH 1/10W 100	3	
R6004,05		ERJ6GMYJ333	M.RESISTOR CH 1/10W 33K	2	
R6006		ERJ6GMYJ332	M.RESISTOR CH 1/10W 3.3K	1	
R6007		ERJ6GMYJ122	M.RESISTOR CH 1/10W 1.2K	1	
R6008		ERJ6GMYJ561	M.RESISTOR CH 1/10W 560	1	
R6009		ERJ6GMYJ333	M.RESISTOR CH 1/10W 33K	1	
R6010		ERJ6GMYJ561	M.RESISTOR CH 1/10W 560	1	
R6011		ERJ6GMYJ333	M.RESISTOR CH 1/10W 33K	1	
R6012		ERJ6GMYJ222	M.RESISTOR CH 1/10W 2.2K	1	
R6013		ERJ6GMYJ683	M.RESISTOR CH 1/10W 68K	1	
R6014		ERJ6GMYJ473	M.RESISTOR CH 1/10W 47K	1	
R6015		ERJ6GMYJ101	M.RESISTOR CH 1/10W 100	1	
R6017		ERJ6GMYJ221	M.RESISTOR CH 1/10W 220	1	
R6018		ERJ6GMYJ131	M.RESISTOR CH 1/10W 130	1	
R6019		ERJ6GMYJ562	M.RESISTOR CH 1/10W 5.6K	1	
R6020		ERJ6GMYJ152	M.RESISTOR CH 1/10W 1.5K	1	
R6021		ERJ6GMYJ201	M.RESISTOR CH 1/10W 200	1	
R6022		ERG3SJ220	M.RESISTOR 3W 22	1	
R6023		ERJ6GMYJ471	M.RESISTOR CH 1/10W 470	1	
R6024		ERJ6GMYJ561	M.RESISTOR CH 1/10W 560	1	
R6025		ERJ6GMYJ391	M.RESISTOR CH 1/10W 390	1	
R6026		ERD2FCVG220	C.RESISTOR 2W 22	1	
R6028		ERJ6GMYJ103	M.RESISTOR CH 1/10W 10K	1	
R6029		ERDS2TJ152	C.RESISTOR 1/4W 1.5K	1	
R6039		ERJ6GMYJ473	M.RESISTOR CH 1/10W 47K	1	
R6040		ERJ6GMYJ562	M.RESISTOR CH 1/10W 5.6K	1	
R6041		ERJ6GMYJ332	M.RESISTOR CH 1/10W 3.3K	1	
R6042,43		ERJ6GMYJ222	M.RESISTOR CH 1/10W 2.2K	2	
R6044,45		ERJ6GMYJ221	M.RESISTOR CH 1/10W 220	2	
R6046		ERJ6GMYJ473	M.RESISTOR CH 1/10W 47K	1	
R6047		ERDS1TJ332	C.RESISTOR 1/2W 3.3K	1	
R6048		ERJ6GMYJ681	M.RESISTOR CH 1/10W 680	1	
R6049		ERJ6GMYJ222	M.RESISTOR CH 1/10W 2.2K	1	
R6053		ERG2SJ471U	M.RESISTOR 2W 470	1	
R6054		ERJ6GMYJ104	M.RESISTOR CH 1/10W 100K	1	
R6055		ERJ6GMYJ101	M.RESISTOR CH 1/10W 100	1	
R6056		ERJ6GMYJ473	M.RESISTOR CH 1/10W 47K	1	
R6057		ERJ6GMYJ222	M.RESISTOR CH 1/10W 2.2K	1	
R6059		ERJ6GMYJ102	M.RESISTOR CH 1/10W 1K	1	
R6060		ERJ6GMYJ104	M.RESISTOR CH 1/10W 100K	1	
R6101		ERJ6GEYJ103	M.RESISTOR CH 1/10W 10K	1	
R6102		ERJ6GEYJ333	M.RESISTOR CH 1/10W 33K	1	
R6103,04		ERJ6GEYJ102	M.RESISTOR CH 1/10W 1K	2	
R6201		ERJ6GMYJ101	M.RESISTOR CH 1/10W 100	1	
R6202		ERJ6GMYJ183	M.RESISTOR CH 1/10W 18K	1	
R6203		ERJ6GMYJ101	M.RESISTOR CH 1/10W 100	1	
R6204		ERJ6GMYJ391	M.RESISTOR CH 1/10W 390	1	
R6205		ERJ6GMYJ103	M.RESISTOR CH 1/10W 10K	1	
R6206		ERJ6GMYJ472	M.RESISTOR CH 1/10W 4.7K	1	
R7401		ERDS2TJ153	C.RESISTOR 1/4W 15K	1	
R7402		ERJ6GMYJ181	M.RESISTOR CH 1/10W 180	1	
R7563		ERJ6GMYJ101	M.RESISTOR CH 1/10W 100	1	
R7651		ERJ6GEYJ332	M.RESISTOR CH 1/10W 3.3K	1	
R7654		ERJ6GEYJ562	M.RESISTOR CH 1/10W 5.6K	1	
R7655		ERJ6GEYJ472	M.RESISTOR CH 1/10W 4.7K	1	

Ref.No.		Part No.	Part Name & Description	Pcs	Remarks
R7656		ERJ6GEYJ151	M.RESISTOR CH 1/10W 150	1	
R7657		ERJ6GEYJ104	M.RESISTOR CH 1/10W 100K	1	
R7658		ERJ6GEYJ393	M.RESISTOR CH 1/10W 39K	1	
R7659		ERJ6GEYJ822	M.RESISTOR CH 1/10W 8.2K	1	
R7661		ERJ6GEYJ562	M.RESISTOR CH 1/10W 5.6K	1	
R7662		ERJ6GEYJ393	M.RESISTOR CH 1/10W 39K	1	
R7663		ERJ6GEYJ222	M.RESISTOR CH 1/10W 2.2K	1	
R7664		ERJ6GEYJ332	M.RESISTOR CH 1/10W 3.3K	1	
R7671,72		ERJ6GEYJ473	M.RESISTOR CH 1/10W 47K	2	
R7673		ERJ6GEYJ104	M.RESISTOR CH 1/10W 100K	1	
R7674		ERJ6GEYJ124	M.RESISTOR CH 1/10W 120K	1	
R7675		ERJ6GEYJ103	M.RESISTOR CH 1/10W 10K	1	
R7676		ERG1SJ152	M.RESISTOR 1W 1.5K	1	
R7677		ERDS2TJ103	C.RESISTOR 1/4W 10K	1	
R7678		ERJ6GEYJ223	M.RESISTOR CH 1/10W 22K	1	
R7679		ERDS2TJ100	C.RESISTOR 1/4W 10	1	
R7680		ERJ6GEYJ102	M.RESISTOR CH 1/10W 1K	1	
R7681,82		ERJ6GEYJ473	M.RESISTOR CH 1/10W 47K	2	
R7683		ERJ6GEYJ563	M.RESISTOR CH 1/10W 56K	1	
R7684		ERJ6GEYJ393	M.RESISTOR CH 1/10W 39K	1	
R7691		ERJ6GEYJ103	M.RESISTOR CH 1/10W 10K	1	
R7692		ERJ6GEYJ104	M.RESISTOR CH 1/10W 100K	1	
R7694		ERJ6GEYJ103	M.RESISTOR CH 1/10W 10K	1	
R7695		ERJ6GEYJ562	M.RESISTOR CH 1/10W 5.6K	1	
R7696		ERJ6GEYJ473	M.RESISTOR CH 1/10W 47K	1	
T703		EIV5EC005A	TRANSFORMER	1	
T704		EIV5EC007A	TRANSFORMER	1	
T711		EIS5EC008A	TRANSFORMER	1	
T4001		EIQ7QF013Q	TRANSFORMER	1	
VR301		EVNDRAA00B24	V.RESISTOR 20K	1	
VR302		EVN4YCA00B23	V.RESISTOR 2K	1	
VR701		EVNDRAA00B23	V.RESISTOR 2K	1	
VR751		EVNDRAA00B53	V.RESISTOR 5K	1	
VR801		EVN4YCA00B52	V.RESISTOR 500	1	
VR802		EVN4YCA00B13	V.RESISTOR 1K	1	
VR803		EVNDRAA00B14	V.RESISTOR 10K	1	
VR2001		EVNDRAA00B54	V.RESISTOR 50K	1	
VR2009,10		EVND1AA00B25	V.RESISTOR 200K	2	
VR2011		EVNDRAA00B15	V.RESISTOR 100K	1	
VR3012		EVNDRAA00B52	V.RESISTOR 500	1	
VR3013		EVNDRAA00B52	V.RESISTOR 500	1	
VR3801		EVN4YCA00B14	V.RESISTOR 10K	1	
VR4002		EVNDRAA00B25	V.RESISTOR 200K	1	
VR7660		EVM4LGA00B23	V.RESISTOR 2K	1	
X301		VSX0225	CRYSTAL OSCILLATOR	1	
X710		EFCH39MGP1	CRYSTAL OSCILLATOR	1	
X711		EFCS6ROMW5	CRYSTAL OSCILLATOR	1	
X712		EFCS6ROMS5	CRYSTAL OSCILLATOR	1	
X801		VSX0162	CRYSTAL OSCILLATOR	1	
X3101		VSX0099	CRYSTAL OSCILLATOR	1	
X6101		VSX0383	CRYSTAL OSCILLATOR	1	
X6801		VSX0258	CRYSTAL OSC.	1	
X7401		VSQ0565	CRYSTAL OSCILLATOR	1	
			MISCELLANEOUS		
		VMA6768	EARTH ANGLE	1	
		ENC17972A	RF CONVERTER	1	[SUPPLIED FROM M.B.V]
					<!>
		VEJ0839	ANT. TERMINAL PLATE	1	[SUPPLIED FROM M.B.V]
		VMZ1352	HEAT SINK COVER	1	
		VJF0379	CLAMP	1	
		VJF0858	CLAMP	1	
		VMC0462	EARTH SPRING	1	[FOR SUB MAIN]
		ENV87837H3	TUNER	1	[SUPPLIED FROM M.B.V]

Ref.No.		Part No.	Part Name & Description	Pcs	Remarks
					<!> [FOR TV DEMODU.]
		VSC2712	SHIELD CASE (TOP)	1	[FOR TV DEMODU.]
		VSC2713	SHIELD CASE (MAIN)	1	[FOR TV DEMODU.]
		VSC2714	SHIELD CASE (BOTTOM)	1	[FOR TV DEMODU.]
		VWJ14HW140MM	FLEXIBLE CABLE(14PIN)	1	(P7401-P7501)
		VWJ0374	FLEXIBLE CABLE(15PIN)	1	(P7402-P7502)
	■	VEP07598B	TIMER C.B.A.		[SUPPLIED FROM M.B.V]
					(NLA) NV-J35EG
			CAPACITORS		
C6701		ECEA0JK470I	E.CAPACITOR 6.3V 47U	1	
C6702		ECKF1H331KBA	C.CAPACITOR 50V 330P	1	
C6703		ECEA1HK010	E.CAPACITOR 50V 1U	1	
C6704		ECEA1HK3R3I	E.CAPACITOR 50V 3.3U	1	
C7501		ECRHA030E41	TRIMMER 3P	1	
C7502		ECUM1H080DCN	C.CAPACITOR CH 50V 8P	1	
C7503		ECUM1H330JCN	C.CAPACITOR CH 50V 33P	1	
C7504		ECUM1H220JCN	C.CAPACITOR CH 50V 22P	1	
C7505		ECEA0JK221	E.CAPACITOR 6.3V 220U	1	
C7506		ECUM1H104ZFN	C.CAPACITOR CH 50V 0.1U	1	
C7507		ECEA1HKR22	E.CAPACITOR 50V 0.22U	1	
C7508		ECUM1H104ZFN	C.CAPACITOR CH 50V 0.1U	1	
C7510		ECEA0JK470	E.CAPACITOR 6.3V 47U	1	
C7511		ECEA1HKA100	E.CAPACITOR 50V 10U	1	
C7512		ECUM1H104ZFN	C.CAPACITOR CH 50V 0.1U	1	
C7513		ECUM1H560JCN	C.CAPACITOR CH 50V 56P	1	
C7525		ECUN1H821KBN	C.CAPACITOR CH 50V 820U	1	
C7551		ECUM1E104ZFN	C.CAPACITOR CH 25V 0.1U	1	
D6701		PN323B	PHOTO DIODE	1	
D7501		MA4068	DIODE	1	
D7504		MA165	DIODE	1	
D7507		MA165	DIODE	1	
D7510,11		MA165	DIODE	2	
D7513		MA165	DIODE	1	
D7516		MA165	DIODE	1	
D7530		MA165	DIODE	1	
D7532-35		MA165	DIODE	4	
D7537-41		MA165	DIODE	5	
D7554,55		LN28RCPL	DIODE	2	
D7556		LN38GCPL	DIODE	1	
DP7501		VSL0148	DISPLAY TUBE	1	
IC6701		UPC1490HA	IC	1	
IC7501		MN187125VHP	IC	1	
IC7502		MN12C261D	IC	1	
IC7503		MN1280L	IC	1	
IC7504		MN1280S	IC	1	(S)
L7501		VLQEL05F221K	COIL 220UH	1	

Ref.No.		Part No.	Part Name & Description	Pcs	Remarks
P7501		VJS1492	CONNECTOR(FEMALE)	1	
P7502		VJS2651B015	CONNECTOR (FEMALE)	1	
P7505		VJS2357A015	CONNECTOR (FEMALE)	1	
QR7501		MRN1404	TRANSISTOR-RESISTOR	1	
QR7525		UN2216	TRANSISTOR-RESISTOR	1	
			RESISTORS		
R6701		ERDS2TJ154	C.RESISTOR 1/4W 150K	1	
R6702		ERDS2TJ8R2	C.RESISTOR 1/4W 8.2	1	
R6703		ERDS2TJ103	C.RESISTOR 1/4W 10K	1	
R7501		ERJ6GMYJ122	M.RESISTOR CH 1/10W 1.2K	1	
R7502		ERJ6GMYJ224	M.RESISTOR CH 1/10W 220K	1	
R7504		ERJ6GMYJ101	M.RESISTOR CH 1/10W 100	1	
R7505		ERJ6GMYJ104	M.RESISTOR CH 1/10W 100K	1	
R7508-10		ERJ6GMYJ103	M.RESISTOR CH 1/10W 10K	3	
R7511		ERJ6GMYJ332	M.RESISTOR CH 1/10W 3.3K	1	
R7512		ERJ6GMYJ473	M.RESISTOR CH 1/10W 47K	1	
R7523-27		ERJ6GMYJ182	M.RESISTOR CH 1/10W 1.8K	5	
R7530-32		ERJ6GMYJ332	M.RESISTOR CH 1/10W 3.3K	3	
R7533		ERJ6GMYJ102	M.RESISTOR CH 1/10W 1K	1	
R7534		ERJ6GMYJ332	M.RESISTOR CH 1/10W 3.3K	1	
R7535		ERDS1TJ5R1	C.RESISTOR 1/2W 5.1	1	
R7538		ERJ6GMYJ103	M.RESISTOR CH 1/10W 10K	1	
R7540		ERJ6GMYJ181	M.RESISTOR CH 1/10W 180	1	
R7544		ERJ6GMYJ181	M.RESISTOR CH 1/10W 180	1	
R7546		ERJ6GMYJ332	M.RESISTOR CH 1/10W 3.3K	1	
R7549		ERJ6GMYJ332	M.RESISTOR CH 1/10W 3.3K	1	
R7550		ERJ6GMYJ181	M.RESISTOR CH 1/10W 180	1	
R7552-54		ERJ6GMYJ182	M.RESISTOR CH 1/10W 1.8K	3	
R7555		ERJ6GMYJ103	M.RESISTOR CH 1/10W 10K	1	
R7561,62		ERJ6GMYJ221	M.RESISTOR CH 1/10W 220	2	
X7501		VSX0140	CRYSTAL OSCILLATOR	1	
X7502		VSX0094	CRYSTAL OSCILLATOR	1	
			MISCELLANEOUS		
		VJF0704	FIP HOLDER	1	
		VSC2671	SHIELD(MAIN)	1	(FOR IR RECEIVER)
		VSC2672	SHIELD(BOTTOM)	1	(FOR IR RECEIVER)
	■	VEP07598A	TIMER C.B.A.		[SUPPLIED FROM M.B.V]
					(NLA) NV-J35B
			CAPACITORS		
C6701		ECEA0JK470I	E.CAPACITOR 6.3V 47U	1	
C6702		ECKF1H331KBA	C.CAPACITOR 50V 330P	1	
C6703		ECEA1HK010	E.CAPACITOR 50V 1U	1	
C6704		ECEA1HK3R3I	E.CAPACITOR 50V 3.3U	1	
C7501		ECRHA030E41	TRIMMER 3P	1	
C7502		ECUM1H080DCN	C.CAPACITOR CH 50V 8P	1	
C7503		ECUM1H330JCN	C.CAPACITOR CH 50V 33P	1	
C7504		ECUM1H220JCN	C.CAPACITOR CH 50V 22P	1	

Ref.No.		Part No.	Part Name & Description	Pcs	Remarks
C7505		ECEA0JK221	E.CAPACITOR 6.3V 220U	1	
C7506		ECUM1H104ZFN	C.CAPACITOR CH 50V 0.1U	1	
C7507		ECEA1HKR22	E.CAPACITOR 50V 0.22U	1	
C7508		ECUM1H104ZFN	C.CAPACITOR CH 50V 0.1U	1	
C7510		ECEA0JK470	E.CAPACITOR 6.3V 47U	1	
C7511		ECEA1HKA100	E.CAPACITOR 50V 10U	1	
C7512		ECUM1H104ZFN	C.CAPACITOR CH 50V 0.1U	1	
C7513		ECUM1H560JCN	C.CAPACITOR CH 50V 56P	1	
C7525		ECUN1H821KBN	C.CAPACITOR CH 50V 820U	1	
C7551		ECUM1E104ZFN	C.CAPACITOR CH 25V 0.1U	1	
D6701		PN323B	PHOTO DIODE	1	
D7501		MA4068	DIODE	1	
D7502		MA165	DIODE	1	
D7507,08		MA165	DIODE	2	
D7510,11		MA165	DIODE	2	
D7513		MA165	DIODE	1	
D7516,17		MA165	DIODE	2	
D7530		MA165	DIODE	1	
D7532-35		MA165	DIODE	4	
D7537-41		MA165	DIODE	5	
D7554,55		LN28RCPL	DIODE	2	
D7556		LN38GCPL	DIODE	1	
DP7501		VSL0148	DISPLAY TUBE	1	
IC6701		UPC1490HA	IC	1	
IC7501		MN187125VHP	IC	1	
IC7502		MN12C261D	IC	1	
IC7503		MN1280L	IC	1	
IC7504		MN1280S	IC	1	(S)
L7501		VLQEL05F221K	COIL 220UH	1	
P7501		VJS1492	CONNECTOR(FEMALE)	1	
P7502		VJS2651B015	CONNECTOR (FEMALE)	1	
P7505		VJS2357A015	CONNECTOR (FEMALE)	1	
QR7501		MRN1404	TRANSISTOR-RESISTOR	1	
QR7525		UN2216	TRANSISTOR-RESISTOR	1	
			RESISTORS		
R6701		ERDS2TJ154	C.RESISTOR 1/4W 150K	1	
R6702		ERDS2TJ8R2	C.RESISTOR 1/4W 8.2	1	
R6703		ERDS2TJ103	C.RESISTOR 1/4W 10K	1	
R7501		ERJ6GMYJ122	M.RESISTOR CH 1/10W 1.2K	1	
R7502		ERJ6GMYJ224	M.RESISTOR CH 1/10W 220K	1	
R7503		ERJ6GMYJ221	M.RESISTOR CH 1/10W 220	1	
R7504		ERJ6GMYJ101	M.RESISTOR CH 1/10W 100	1	
R7505		ERJ6GMYJ104	M.RESISTOR CH 1/10W 100K	1	
R7508-10		ERJ6GMYJ103	M.RESISTOR CH 1/10W 10K	3	
R7511		ERJ6GMYJ332	M.RESISTOR CH 1/10W 3.3K	1	
R7512		ERJ6GMYJ473	M.RESISTOR CH 1/10W 47K	1	
R7523-27		ERJ6GMYJ182	M.RESISTOR CH 1/10W 1.8K	5	
R7530-32		ERJ6GMYJ332	M.RESISTOR CH 1/10W 3.3K	3	
R7533		ERJ6GMYJ102	M.RESISTOR CH 1/10W 1K	1	
R7534		ERJ6GMYJ332	M.RESISTOR CH 1/10W 3.3K	1	
R7535		ERDS1TJ5R1	C.RESISTOR 1/2W 5.1	1	
R7538		ERJ6GMYJ103	M.RESISTOR CH 1/10W 10K	1	
R7540		ERJ6GMYJ181	M.RESISTOR CH 1/10W 180	1	
R7544		ERJ6GMYJ181	M.RESISTOR CH 1/10W 180	1	

Ref.No.		Part No.	Part Name & Description	Pcs	Remarks
R7546		ERJ6GMYJ332	M.RESISTOR CH 1/10W 3.3K	1	
R7549		ERJ6GMYJ332	M.RESISTOR CH 1/10W 3.3K	1	
R7550		ERJ6GMYJ181	M.RESISTOR CH 1/10W 180	1	
R7552-54		ERJ6GMYJ182	M.RESISTOR CH 1/10W 1.8K	3	
R7555		ERJ6GMYJ103	M.RESISTOR CH 1/10W 10K	1	
R7563		ERJ6GMYJ101	M.RESISTOR CH 1/10W 100	1	
X7501		VSX0140	CRYSTAL OSCILLATOR	1	
X7502		VSX0094	CRYSTAL OSCILLATOR	1	
			MISCELLANEOUS		
		VJF0704	FIP HOLDER	1	
		VSC2671	SHIELD(MAIN)	1	(FOR IR RECECVER)
		VSC2672	SHIELD(BOTTOM)	1	(FOR IR RECECVER)
	■	VEP01420AB	POWER C.B.A.		[SUPPLIED FROM M.B.V]
					<!>(NLA) NV-J35EG
			CAPACITORS		
C1101		ECQU2A154MNB	P.CAPACITOR 100V 0.15U	1	<!>
C1102		ECQU2A104MN	P.CAPACITOR 100V 0.01U	1	<!>
C1108		ECOS2GU820B	C.CAPACITOR 400V 82P	1	
C1109		ECEA2GG010	E.CAPACITOR 400V 1U	1	
C1110		ECQE6473JZ	P.CAPACITOR 630V 0.047U	1	
C1111		ECKD3D331KBN	C.CAPACITOR 2KV 330P	1	
C1113		ECQB1H472KZ	P.CAPACITOR 50V 4700P	1	
C1114		ECA1CXLV470	E.CAPACITOR	1	
C1115		ECQB1H472KZ	P.CAPACITOR 50V 4700P	1	
C1117		ECQP1101JZ	P.CAPACITOR 100V 100P	1	
C1118		ECEA1HGE101	E.CAPACITOR 50V 100U	1	
C1119,20		ECEA1DFZ681X	E.CAPACITOR 20V 680U	2	
C1121		ECEA1HGE100	E.CAPACITOR 50V 10U	1	
C1122		ECEA1AFZ331X	E.CAPACITOR 10V 330U	1	
C1123		ECEA1HGE100	E.CAPACITOR 50V 10U	1	
C1124,25		ECEA1AGE101	E.CAPACITOR 10V 100U	2	
C1126		ECEA1CGE470	E.CAPACITOR 16V 47U	1	
C1127		ECEA0JFZ471	E.CAPACITOR 6.3V 470U	1	
C1128-31		ECKF1H103ZFB	C.CAPACITOR 50V 0.01U	4	
C1132		ECEA1CGE100	E.CAPACITOR 16V 10U	1	
C1134,35		ECKF1H103ZFB	C.CAPACITOR 50V 0.01U	2	
C1136		ECQV1H105JZ	P.CAPACITOR 50V 1U	1	
C1137		ECQV1H223JS	P.CAPACITOR 50V 0.022U	1	
C1142		VCC0021	CAPACITOR	1	<!>
C1145		VCC0021	CAPACITOR	1	<!>
C1147		VCC0022	C.CAPACITOR 1000P	1	<!>
D1102		S1WBA60	DIODE	1	<!>
D1103		VSD0002	DIODE	1	<!>
D1104		AP01C	DIODE	1	
D1105		MA178	DIODE	1	
D1106		MA4039	DIODE	1	
D1107		MA165	DIODE	1	
D1108		ERA22-02	DIODE	1	
D1109		RL22P	DIODE	1	
D1110		MA185	DIODE	1	
D1111		11EQS04	DIODE	1	
D1112		ERB83-004L17	DIODE	1	
D1113		MA2200B	DIODE	1	
D1114		MA4130L	DIODE	1	

Ref.No.		Part No.	Part Name & Description	Pcs	Remarks
IC1101		STRD1816	IC	1	<!>
IC1102		STK5392	IC	1	
K1115		WJP0002T		1	#K
L1101,02		ELF18D290A	FILTER	2	<!>
L1103		VLQ0335	COIL H	1	
L1104-07		VLP0085	FILTER	4	
P1101		VJS2651B013W	CONNECTOR (FEMALE)	1	
P1102		VJS2625	CONNECTOR (FEMALE)	1	<!>
Q1102		2SD1330	TRANSISTOR	1	
			RESISTORS		
R1101		ERC12AGM334	S.RESISTOR 1/2W 330K	1	<!>
R1102,03		ERDS1TJ823	C.RESISTOR 1/2W 82K	2	
R1104		ERDS2TJ562	C.RESISTOR 1/4W 5.6K	1	
R1106		ERG3ANJ683	M.RESISTOR 3W 68K	1	
R1108		ERD2FTVG182	C.RESISTOR 1/4W 1.8K	1	<!>
R1110		ERG2SJ330	M.RESISTOR 2W 33	1	
R1111		ERG2SJ181	M.RESISTOR 2W 180	1	
R1113		ERG1SJ182E	M.RESISTOR 1W 1.8K	1	
R1114		ERDS2TJ103	C.RESISTOR 1/4W 10K	1	
R1118		ERDS2TJ1R0	C.RESISTOR 1/4W 1.0	1	
R1123,24		ERDS2TJ153	C.RESISTOR 1/4W 15K	2	
R1125		ERW1PK2R2	WIRE WOUND 2W 2.2	1	
T1101		VLT0571	TRANSFORMER	1	<!>
			MISCELLANEOUS		
		VJP0318	FUSE HOLDER	2	<!>
		VMZ1183	CAPACITOR COVER	1	<!>
		VMZ1608	CAPACITOR COVER	1	<!>
	■	VEP01420AA	POWER C.B.A.		[SUPPLIED FROM M.B.V]
					<!>(NLA) NV-J35B
			CAPACITORS		
C1101		ECQU2A563MNB	P.CAPACITOR 100V 0.056U	1	<!>
C1102		ECQU2A333MNB	P.CAPACITOR 100V 0.033U	1	<!>
C1108		ECOS2GU820B	C.CAPACITOR 400V 82P	1	
C1109		ECEA2GG010	E.CAPACITOR 400V 1U	1	
C1110		ECQE6473JZ	P.CAPACITOR 630V 0.047U	1	
C1111		ECKD3D331KBN	C.CAPACITOR 2KV 330P	1	
C1113		ECQB1H472KZ	P.CAPACITOR 50V 4700P	1	
C1114		ECA1CXLV470	E.CAPACITOR	1	
C1115		ECQB1H472KZ	P.CAPACITOR 50V 4700P	1	

Ref.No.		Part No.	Part Name & Description	Pcs	Remarks
C1117		ECQP1101JZ	P.CAPACITOR 100V 100P	1	
C1118		ECEA1HGE101	E.CAPACITOR 50V 100U	1	
C1119,20		ECEA1DFZ681X	E.CAPACITOR 20V 680U	2	
C1121		ECEA1HGE100	E.CAPACITOR 50V 10U	1	
C1122		ECEA1AFZ331X	E.CAPACITOR 10V 330U	1	
C1123		ECEA1HGE100	E.CAPACITOR 50V 10U	1	
C1124,25		ECEA1AGE101	E.CAPACITOR 10V 100U	2	
C1126		ECEA1CGE470	E.CAPACITOR 16V 47U	1	
C1127		ECEA0JFZ471	E.CAPACITOR 6.3V 470U	1	
C1128-31		ECKF1H103ZFB	C.CAPACITOR 50V 0.01U	4	
C1132		ECEA1CGE100	E.CAPACITOR 16V 10U	1	
C1134,35		ECKF1H103ZFB	C.CAPACITOR 50V 0.01U	2	
C1136		ECQV1H105JZ	P.CAPACITOR 50V 1U	1	
C1137		ECQV1H223JS	P.CAPACITOR 50V 0.022U	1	
C1142		VCC0019	C.CAPACITOR 330P	1	<!>
C1145		VCC0019	C.CAPACITOR 330P	1	<!>
C1147		VCC0022	C.CAPACITOR 1000P	1	<!>
D1101		SNR-300K4	SURGE ABSORBER	1	<!>
D1102		S1WBA60	DIODE	1	<!>
D1103		VSD0002	DIODE	1	<!>
D1104		AP01C	DIODE	1	
D1105		MA178	DIODE	1	
D1106		MA4039	DIODE	1	
D1107		MA165	DIODE	1	
D1108		ERA22-02	DIODE	1	
D1109		RL2ZP	DIODE	1	
D1110		MA185	DIODE	1	
D1111		11EQS04	DIODE	1	
D1112		ERB83-004L17	DIODE	1	
D1113		MA2200B	DIODE	1	
D1114		MA4130L	DIODE	1	
IC1101		STRD1816	IC	1	<!>
IC1102		STK5392	IC	1	
K1115		WJP0002T	LEAD WIRE	1	#K
L1102		ELF18D290A	FILTER	1	<!>
L1103		VLQ0335	COIL H	1	
L1108,09		VLP0085	FILTER	2	
P1101		VJS2651B013W	CONNECTOR (FEMALE)	1	
P1102		VJS2625	CONNECTOR (FEMALE)	1	<!>
Q1102		2SD1330	TRANSISTOR	1	
			RESISTORS		
R1101		ERC12AGM334	S.RESISTOR 1/2W 330K	1	<!>
R1102,03		ERDS1TJ823	C.RESISTOR 1/2W 82K	2	
R1104		ERDS2TJ562	C.RESISTOR 1/4W 5.6K	1	
R1106		ERG3ANJ683	M.RESISTOR 3W 68K	1	
R1108		ERD2FTVG182	C.RESISTOR 1/4W 1.8K	1	<!>
R1110		ERG2SJ330	M.RESISTOR 2W 33	1	
R1111		ERG2SJ181	M.RESISTOR 2W 180	1	
R1113		ERG1SJ182E	M.RESISTOR 1W 1.8K	1	
R1114		ERDS2TJ103	C.RESISTOR 1/4W 10K	1	
R1118		ERDS2TJ1R0	C.RESISTOR 1/4W 1.0	1	
R1123,24		ERDS2TJ153	C.RESISTOR 1/4W 15K	2	
R1125		ERW1PK2R2	WIRE WOUND 2W 2.2	1	

Ref.No.		Part No.	Part Name & Description	Pcs	Remarks
T1101		VLT0571	TRANSFORMER	1	<!>
			MISCELLANEOUS		
		VJF0318	FUSE HOLDER	2	<!>
		VMZ1183	CAPACITOR COVER	1	<!>
		VMZ1608	CAPACITOR COVER	1	<!>
	■	VEP05137D	HEAD AMP C.B.A.		(NLA) NV-J35EG
			CAPACITORS		
C501		ECEA0JK470	E.CAPACITOR 6.3V 47U	1	
C502		ECUM1E104ZFN	C.CAPACITOR CH 25V 0.1U	1	
C505		ECUM1H560JCN	C.CAPACITOR CH 50V 56P	1	
C507		ECEA1HK010	E.CAPACITOR 50V 1U	1	
C508		ECUM1H103ZFN	C.CAPACITOR CH 50V 0.01U	1	
C509		ECUM1H102KBN	C.CAPACITOR CH 50V 1000P	1	
C510,11		ECUM1H103ZFN	C.CAPACITOR CH 50V 0.01U	2	
C512		ECUM1H820JCN	C.CAPACITOR CH 50V 82P	1	
C513		ECEA1HK010	E.CAPACITOR 50V 1U	1	
C514		ECUM1E104ZFN	C.CAPACITOR CH 25V 0.1U	1	
C515		ECUM1H181JCN	C.CAPACITOR CH 50V 180P	1	
C516		ECUM1H330JCN	C.CAPACITOR CH 50V 33P	1	
C517		ECUM1H103ZFN	C.CAPACITOR CH 50V 0.01U	1	
C518		ECUM1E104ZFN	C.CAPACITOR CH 25V 0.1U	1	
C523		ECEA1HK010	E.CAPACITOR 50V 1U	1	
C524		ECUM1H330JCN	C.CAPACITOR CH 50V 33P	1	
C525		VCYD1C104MR1	S.CAPACITOR 16V 0.1U	1	
C528		ECUM1H102KBN	C.CAPACITOR CH 50V 1000P	1	
C529		ECEA1CK100	E.CAPACITOR 16V 10U	1	
C530		ECUM1E104ZFN	C.CAPACITOR CH 25V 0.1U	1	
C531		ECUM1H470JCN	C.CAPACITOR CH 50V 47P	1	
C532		ECUM1E104ZFN	C.CAPACITOR CH 25V 0.1U	1	
C533		ECUM1H470JCN	C.CAPACITOR CH 50V 47P	1	
C534,35		ECEA1CK100	E.CAPACITOR 16V 10U	2	
C536		ECUM1E104ZFN	C.CAPACITOR CH 25V 0.1U	1	
C537		ECUM1H470JCN	C.CAPACITOR CH 50V 47P	1	
C538		ECUM1E104ZFN	C.CAPACITOR CH 25V 0.1U	1	
C539		ECUM1H470JCN	C.CAPACITOR CH 50V 47P	1	
C540		ECEA1CK100	E.CAPACITOR 16V 10U	1	
C541		ECUM1H102KBN	C.CAPACITOR CH 50V 1000P	1	
C542		ECCF1H080DC	C.CAPACITOR 50V 8P	1	
IC501		BA7274S	IC	1	
L501		VLQEL05F101K	COIL 100UH	1	
L503		VLQEL05F270K	COIL 27UH	1	
L504		VLQEL05F101K	COIL 100UH	1	
L505		VLQEL05F820K	COIL 82UH	1	
L506		VLQEL05F151K	COIL 150UH	1	
P002		VJS1449	CONNECTOR(FEMALE)	1	
P501		VJP1931T	CONNECTOR (MALE)	1	

Ref.No.		Part No.	Part Name & Description	Pcs	Remarks
Q501		2SB709	TRANSISTOR CHIP	1	(Q,R,S)
Q502		2SC2295	TRANSISTOR	1	
QR501		DTC363EK	TRANSISTOR-RESISTOR	1	
			RESISTORS		
R501		ERJ6GMYJ102	M.RESISTOR CH 1/10W 1K	1	
R502		ERJ6GMYJ223	M.RESISTOR CH 1/10W 22K	1	
R503		ERJ6GMYJ152	M.RESISTOR CH 1/10W 1.5K	1	
R504		ERJ6GMYJ391	M.RESISTOR CH 1/10W 390	1	
R506		ERJ6GMYJ204	M.RESISTOR CH 1/10W 200K	1	
R507		ERJ6GMYJ561	M.RESISTOR CH 1/10W 560	1	
R508		ERJ6GMYJ222	M.RESISTOR CH 1/10W 2.2K	1	
R509		ERJ6GMYJ102	M.RESISTOR CH 1/10W 1K	1	
R510		ERJ6GMYJ331	M.RESISTOR CH 1/10W 330	1	
R512		ERJ6GMYJ103	M.RESISTOR CH 1/10W 10K	1	
R513		ERJ6GMYJ330	M.RESISTOR CH 1/10W 33	1	
R515		ERJ6GMYJ330	M.RESISTOR CH 1/10W 33	1	
R518		ERJ6GMYJ330	M.RESISTOR CH 1/10W 33	1	
R519		ERJ6GMYJ471	M.RESISTOR CH 1/10W 470	1	
R523		ERJ6GMYJ821	M.RESISTOR CH 1/10W 820	1	
R524		ERJ6GMYJ100	M.RESISTOR CH 1/10W 10	1	
R525		ERJ6GMYJ222	M.RESISTOR CH 1/10W 2.2K	1	
R526		ERJ6GMYJ100	M.RESISTOR CH 1/10W 10	1	
R527		ERJ6GMYJ222	M.RESISTOR CH 1/10W 2.2K	1	
R528		ERJ6GMYJ821	M.RESISTOR CH 1/10W 820	1	
R529		ERJ6GMYJ561	M.RESISTOR CH 1/10W 560	1	
R530		ERJ6GMYJ100	M.RESISTOR CH 1/10W 10	1	
R531		ERJ6GMYJ222	M.RESISTOR CH 1/10W 2.2K	1	
R532		ERJ6GMYJ100	M.RESISTOR CH 1/10W 10	1	
R533		ERJ6GMYJ222	M.RESISTOR CH 1/10W 2.2K	1	
R534-36		ERJ6GMYJ561	M.RESISTOR CH 1/10W 560	3	
VR501		EVND1AA00B23	V.RESISTOR 2K	1	
VR502		EVND1AA00B13	V.RESISTOR 1K	1	
			MISCELLANEOUS		
		VSC2353	SHIELD(TOP)	1	
		VSC2355	SHIELD(BOTTOM)	1	
		VSC2354	SHIELD(MAIN)	1	
	■	VEP05137A	HEAD AMP C.B.A.		(NLA) NV-J35B
			CAPACITORS		
C501		ECEA0JK470	E.CAPACITOR 6.3V 47U	1	
C502		ECUM1E104ZFN	C.CAPACITOR CH 25V 0.1U	1	
C505		ECUM1H560JCN	C.CAPACITOR CH 50V 56P	1	
C507		ECEA1HK010	E.CAPACITOR 50V 1U	1	
C508		ECUM1H103ZFN	C.CAPACITOR CH 50V 0.01U	1	
C509		ECUM1H102KBN	C.CAPACITOR CH 50V 1000P	1	
C510,11		ECUM1H103ZFN	C.CAPACITOR CH 50V 0.01U	2	
C512		ECUM1H820JCN	C.CAPACITOR CH 50V 82P	1	
C513		ECEA1HK010	E.CAPACITOR 50V 1U	1	
C514		ECUM1E104ZFN	C.CAPACITOR CH 25V 0.1U	1	
C515		ECUM1H181JCN	C.CAPACITOR CH 50V 180P	1	

Ref.No.		Part No.	Part Name & Description	Pcs	Remarks
C516		ECUM1H330JCN	C.CAPACITOR CH 50V 33P	1	
C517		ECUM1H103ZFN	C.CAPACITOR CH 50V 0.01U	1	
C518		ECUM1E104ZFN	C.CAPACITOR CH 25V 0.1U	1	
C522		ECUM1E104ZFN	C.CAPACITOR CH 25V 0.1U	1	
C523		ECEA1HK010	E.CAPACITOR 50V 1U	1	
C524		ECUM1H330JCN	C.CAPACITOR CH 50V 33P	1	
C525		VCYD1C104MR1	S.CAPACITOR 16V 0.1U	1	
C526		ECUM1H330JCN	C.CAPACITOR CH 50V 33P	1	
C527		VCYD1C104MR1	S.CAPACITOR 16V 0.1U	1	
C528		ECUM1H102KBN	C.CAPACITOR CH 50V 1000P	1	
C529		ECEA1CK100	E.CAPACITOR 16V 10U	1	
C530		ECUM1E104ZFN	C.CAPACITOR CH 25V 0.1U	1	
C531		ECUM1H470JCN	C.CAPACITOR CH 50V 47P	1	
C532		ECUM1E104ZFN	C.CAPACITOR CH 25V 0.1U	1	
C533		ECUM1H470JCN	C.CAPACITOR CH 50V 47P	1	
C534,35		ECEA1CK100	E.CAPACITOR 16V 10U	2	
C536		ECUM1E104ZFN	C.CAPACITOR CH 25V 0.1U	1	
C537		ECUM1H470JCN	C.CAPACITOR CH 50V 47P	1	
C538		ECUM1E104ZFN	C.CAPACITOR CH 25V 0.1U	1	
C539		ECUM1H470JCN	C.CAPACITOR CH 50V 47P	1	
C540		ECEA1CK100	E.CAPACITOR 16V 10U	1	
C541		ECUM1H102KBN	C.CAPACITOR CH 50V 1000P	1	
C542		ECCF1H080DC	C.CAPACITOR 50V 8P	1	
IC501		BA7274S	IC	1	
L501		VLQEL05F101K	COIL 100UH	1	
L503		VLQEL05F270K	COIL 27UH	1	
L504		VLQEL05F101K	COIL 100UH	1	
L505		VLQEL05F820K	COIL 82UH	1	
L506		VLQEL05F151K	COIL 150UH	1	
P002		VJS1449	CONNECTOR(FEMALE)	1	
P501		VJP1931T	CONNECTOR (MALE)	1	
Q501		2SB709	TRANSISTOR CHIP	1	(Q,R,S)
Q502		2SC2295	TRANSISTOR	1	
QR501		DTC363EK	TRANSISTOR-RESISTOR	1	
			RESISTORS		
R501		ERJ6GMYJ102	M.RESISTOR CH 1/10W 1K	1	
R502		ERJ6GMYJ223	M.RESISTOR CH 1/10W 22K	1	
R503		ERJ6GMYJ152	M.RESISTOR CH 1/10W 1.5K	1	
R504		ERJ6GMYJ391	M.RESISTOR CH 1/10W 390	1	
R506		ERJ6GMYJ204	M.RESISTOR CH 1/10W 200K	1	
R507		ERJ6GMYJ561	M.RESISTOR CH 1/10W 560	1	
R508		ERJ6GMYJ222	M.RESISTOR CH 1/10W 2.2K	1	
R509		ERJ6GMYJ102	M.RESISTOR CH 1/10W 1K	1	
R510		ERJ6GMYJ331	M.RESISTOR CH 1/10W 330	1	
R512		ERJ6GMYJ103	M.RESISTOR CH 1/10W 10K	1	
R513		ERJ6GMYJ330	M.RESISTOR CH 1/10W 33	1	
R515		ERJ6GMYJ330	M.RESISTOR CH 1/10W 33	1	
R518		ERJ6GMYJ330	M.RESISTOR CH 1/10W 33	1	
R519,20		ERJ6GMYJ471	M.RESISTOR CH 1/10W 470	2	
R523		ERJ6GMYJ821	M.RESISTOR CH 1/10W 820	1	
R524		ERJ6GMYJ100	M.RESISTOR CH 1/10W 10	1	
R525		ERJ6GMYJ222	M.RESISTOR CH 1/10W 2.2K	1	
R526		ERJ6GMYJ100	M.RESISTOR CH 1/10W 10	1	
R527		ERJ6GMYJ222	M.RESISTOR CH 1/10W 2.2K	1	
R528		ERJ6GMYJ821	M.RESISTOR CH 1/10W 820	1	
R529		ERJ6GMYJ561	M.RESISTOR CH 1/10W 560	1	
R530		ERJ6GMYJ100	M.RESISTOR CH 1/10W 10	1	

Ref.No.		Part No.	Part Name & Description	Pcs	Remarks
R531		ERJ6GMYJ222	M.RESISTOR CH 1/10W 2.2K	1	
R532		ERJ6GMYJ100	M.RESISTOR CH 1/10W 10	1	
R533		ERJ6GMYJ222	M.RESISTOR CH 1/10W 2.2K	1	
R534-36		ERJ6GMYJ561	M.RESISTOR CH 1/10W 560	3	
VR501		EVND1AA00B23	V.RESISTOR 2K	1	
VR502		EVND1AA00B13	V.RESISTOR 1K	1	
			MISCELLANEOUS		
		VSC2353	SHIELD(TOP)	1	
		VSC2355	SHIELD(BOTTOM)	1	
		VSC2354	SHIELD(MAIN)	1	
	■	VEP06681A	POWER SW C.B.A.		[SUPPLIED FROM M.B.V] (NLA)
			CAPACITORS		
C4301		ECEA1CKS100	E.CAPACITOR 16V 10U	1	
C4302,03		ECEA1CKS470	E.CAPACITOR 16V 47U	2	
C4304		ECEA1HKS010	E.CAPACITOR 50V 1U	1	
D6201		LN28RCPPU	DIODE	1	
D6202,03		MA165	DIODE	2	
J4301		VJJ0281		1	#J
P6201		VJS2649	CONNECTOR	1	
P6202		VJP1244T	CONNECTOR(MALE) 4P	1	
PP6201		VJP2648	CONNECTOR (MALE)	1	
PS4301		VJS2648	CONNECTOR (FEMALE)	1	
Q4301		2SC2405	TRANSISTOR	1	
Q4302		2SA1034	TRANSISTOR	1	
			RESISTORS		
R4301		ERJ6GMYJ472	M.RESISTOR CH 1/10W 4.7K	1	
R4302		ERJ6GMYJ101	M.RESISTOR CH 1/10W 100	1	
R4303		ERJ6GMYJ153	M.RESISTOR CH 1/10W 15K	1	
R4304		ERJ6GMYJ104	M.RESISTOR CH 1/10W 100K	1	
R4305		ERJ6GMYJ103	M.RESISTOR CH 1/10W 10K	1	
R4306		ERJ6GMYJ331	M.RESISTOR CH 1/10W 330	1	
R4307,08		ERJ6GMYJ103	M.RESISTOR CH 1/10W 10K	2	
R4309		ERJ6GMYJ152	M.RESISTOR CH 1/10W 1.5K	1	
R6201		ERJ6GMYJ181	M.RESISTOR CH 1/10W 180	1	
R6203		ERJ6GMYJ102	M.RESISTOR CH 1/10W 1K	1	
R6205		ERJ6GMYJ102	M.RESISTOR CH 1/10W 1K	1	
SW6201		VSS0187	SWITCH	1	

Ref.No.		Part No.	Part Name & Description	Pcs	Remarks
SW6203		EVQ11407K	SWITCH	1	
SW6204		VSS0236	SWITCH	1	
VR3004		EWAKFKXB3B24	V.RESISTOR 20K	1	
VR3013		EVNDRAA00B52	V.RESISTOR 500	1	
			MISCELLANEOUS		
		VGU4537	SWITCH KNOB	2	
		VMD0504	LED HOLDER	1	
	■	VEP00P95A	MIC JACK C.B.A.		[SUPPLIED FROM M.B.V]
					(NLA)
			CAPACITORS		
C4301		ECEA1CKS100	E.CAPACITOR 16V 10U	1	
C4302,03		ECEA1CKS470	E.CAPACITOR 16V 47U	2	
C4304		ECEA1HKS010	E.CAPACITOR 50V 1U	1	
J4301		VJJ0281		1	#J
PS4301		VJS2648	CONNECTOR (FEMALE)	1	
Q4301		2SC2405	TRANSISTOR	1	
Q4302		2SA1034	TRANSISTOR	1	
			RESISTORS		
R4301		ERJ6GMYJ472	M.RESISTOR CH 1/10W 4.7K	1	
R4302		ERJ6GMYJ101	M.RESISTOR CH 1/10W 100	1	
R4303		ERJ6GMYJ153	M.RESISTOR CH 1/10W 15K	1	
R4304		ERJ6GMYJ104	M.RESISTOR CH 1/10W 100K	1	
R4305		ERJ6GMYJ103	M.RESISTOR CH 1/10W 10K	1	
R4306		ERJ6GMYJ331	M.RESISTOR CH 1/10W 330	1	
R4307,08		ERJ6GMYJ103	M.RESISTOR CH 1/10W 10K	2	
R4309		ERJ6GMYJ152	M.RESISTOR CH 1/10W 1.5K	1	
		VEP06569AC	KEY BOARD SW C.B.A.	1	[SUPPLIED FROM M.B.V]
					(NLA) NV-J35EG
		VEP06569D	KEY BOARD SW C.B.A.	1	[SUPPLIED FROM M.B.V]
					(NLA) NV-J35B
			CONNECTOR		
P6501		VJS2357B015	CONNECTOR(FEMALE)	1	
			SWITCHES		
SW6502-07		EVQ11404M	SWITCH	6	
SW6509		EVQ11404M	SWITCH	1	

Ref.No.		Part No.	Part Name & Description	Pcs	Remarks
SW6510		EVQ11404M	SWITCH	1	NV-J35B
SW6511-28		EVQ11404M	SWITCH	18	
			MISCELLANEOUS		
		VWJ15UG065BB	FLAT CABLE	1	
	■	VEP66125E	REMOTE CONTROL UNIT C.B.A.		(NLA) NV-J35EG
C6801		ECEA1AKA470	E.CAPACITOR 10V 47U	1	
C6802		ECUM1E104ZFM	C.CAPACITOR 25V 0.1U	1	
C6803		ECEV1CFN4R7	E.CAPACITOR 16V 4.7U	1	
C6804		ECEA1HK010	E.CAPACITOR 50V 1U	1	
C6808,09		ECUM1H103ZFN	C.CAPACITOR 50V 0.01U	2	
C6810		ECUM1E104ZFM	C.CAPACITOR 25V 0.1U	1	
C6811		ECUM1H223ZFN	C.CAPACITOR 50V 0.022U	1	
C6812		ECUM1E154ZFM	C.CAPACITOR 25V 0.15U	1	
D6801		SE303ACYTF	DIODE	1	
D6803-11		MA221	DIODE	9	
D6813		MA221	DIODE	1	
D6817		MA221	DIODE	1	
IC6801		MN158455VSSD	IC	1	
IC6802		AN8356S	IC	1	
L6801		ELT3K017B	COIL	1	
Q6801		2SD1328	TRANSISTOR	1	(R,S)
Q6802		2SB709	TRANSISTOR	1	(Q,R,S)
Q6803		2SD601	TRANSISTOR	1	(Q,R,S)
QR6803		DTC144TK	TRANSISTOR-RESISTOR	1	
R6802,03		ERJ6GMYJ474	M.RESISTOR CH1/10W 470K	2	
R6804		ERJ6GMYJ394	M.RESISTOR CH1/10W 390K	1	
R6805		ERJ6GMYJ153	M.RESISTOR CH1/10W 15K	1	
R6806		ERJ6GMYJ561	M.RESISTOR CH1/10W 560	1	
R6807		ERJ8GCYJ1R2	M.RESISTOR CH 1/8W 1.2	1	
R6808		ERJ6GMYJ824	M.RESISTOR CH1/10W 820K	1	
R6810		ERJ6GMYJ184	M.RESISTOR CH1/10W 180K	1	
R6812		ERJ6GMYJ273	M.RESISTOR CH1/10W 27K	1	
R6813		ERJ6GMYJ6R8	M.RESISTOR CH1/10W 6.8	1	
R6814,15		ERJ6GMYJ473	M.RESISTOR CH1/10W 47K	2	
R6816		ERJ6GMYJ334	M.RESISTOR CH1/10W 330K	1	
R6817		ERJ6GMYJ331	M.RESISTOR CH1/10W 330	1	
SN6801		VSQ0567	PHOTO DETECTOR	1	

Ref.No.		Part No.	Part Name & Description	Pcs	Remarks
VR6801		EVNDXAA00B34	V.RESISTOR 30K	1	
X6801		EFOGC3524T4	CRYSTAL OSCILLATOR	1	
X6802		EFBAL30D401K	BUZZER	1	
			MISCELLANEOUS		
		VGQ1406	TERMINAL BASE	1	
		VJR0401	TERMINAL ANGLE	2	
	■	VEP66125D	REMOTE CONTROL UNIT C.B.A.		(NLA) NV-J35B
C6801		ECEA1AKA470	E.CAPACITOR 10V 47U	1	
C6802		ECUM1E104ZFM	C.CAPACITOR 25V 0.1U	1	
C6803		ECEV1CFN4R7	E.CAPACITOR 16V 4.7U	1	
C6804		ECEA1HK010	E.CAPACITOR 50V 1U	1	
C6808,09		ECUM1H103ZFN	C.CAPACITOR 50V 0.01U	2	
C6810		ECUM1E104ZFM	C.CAPACITOR 25V 0.1U	1	
C6811		ECUM1H223ZFN	C.CAPACITOR 50V 0.022U	1	
C6812		ECUM1E154ZFM	C.CAPACITOR 25V 0.15U	1	
D6801		SE303ACYTF	DIODE	1	
D6803-12		MA221	DIODE	10	
D6817		MA221	DIODE	1	
IC6801		MN158455VSSD	IC	1	
IC6802		AN8356S	IC	1	
L6801		ELT3K017B	COIL	1	
Q6801		2SD1328	TRANSISTOR	1	(R,S)
Q6802		2SB709	TRANSISTOR	1	(Q,R,S)
Q6803		2SD601	TRANSISTOR	1	(Q,R,S)
QR6803		DTC144TK	TRANSISTOR-RESISTOR	1	
R6802,03		ERJ6GMYJ474	M.RESISTOR CH1/10W 470K	2	
R6804		ERJ6GMYJ394	M.RESISTOR CH1/10W 390K	1	
R6805		ERJ6GMYJ153	M.RESISTOR CH1/10W 15K	1	
R6806		ERJ6GMYJ561	M.RESISTOR CH1/10W 560	1	
R6807		ERJ8GCYJ1R2	M.RESISTOR CH 1/8W 1.2	1	
R6808		ERJ6GMYJ824	M.RESISTOR CH1/10W 820K	1	
R6810		ERJ6GMYJ184	M.RESISTOR CH1/10W 180K	1	
R6812		ERJ6GMYJ273	M.RESISTOR CH1/10W 27K	1	
R6813		ERJ6GMYJ6R8	M.RESISTOR CH1/10W 6.8	1	
R6814,15		ERJ6GMYJ473	M.RESISTOR CH1/10W 47K	2	
R6816		ERJ6GMYJ334	M.RESISTOR CH1/10W 330K	1	
R6817		ERJ6GMYJ331	M.RESISTOR CH1/10W 330	1	

Ref.No.		Part No.	Part Name & Description	Pcs	Remarks
SN6801		VSQ0567	PHOTO DETECTOR	1	
VR6801		EVNDXAA00B34	V.RESISTOR 30K	1	
X6801		EFOGC3524T4	CRYSTAL OSCILLATOR	1	
X6802		EFBAL30D401K	BUZZER	1	
			MISCELLANEOUS		
		VGQ1406	TERMINAL BASE	1	
		VJR0401	TERMINAL ANGLE	2	
	■	VXA3554	MECHANISM CONNECTION C.B.A.		(NLA)
D1501		GL450	LED	1	
IC1501		ON2170	IC	1	
R1501,02		ERJ8GCYJ223	CHIP 1/8W 22K	2	
P1504		VJS2342W	CONNECTOR 13P	1	
P1505		VJP1242T	CONNECTOR 2P	1	
			MISCELLANEOUS		
		VMA7844	REINFORCEMENT PLATE(F)	1	
		VMA7845	REINFORCEMENT PLATE(R)	1	
		VES0489	SAFETY SW	1	
		VMB2020	EARTH SPRING	1	
		VMD0911	LED HOLDER	1	
		VSS0175	MODE SW	1	
	■	VEK3578	SUPPLY PHOTO Tr. C.B.A.		(NLA)
C1501		ECKF1H102KB	C.CAPACITOR 50V 1000P	1	
Q1501		PN150NVS	TRANSISTOR	1	
			MISCELLANEOUS		
		VMD0645	PHOTO Tr. HOLDER	1	
			TAKE-UP PHOTO Tr. C.B.A.		
C1502		ECKF1H102KB	C.CAPACITOR 50V 1000P	1	
P1503		VJS2165W	CONNECTOR 6P	1	
Q1502		PN150NVS	TRANSISTOR	1	
R1503		ERDS2TJ222	C.RESISTOR 1/4W 2.2K	1	
			MISCELLANEOUS		
		VMD0645	PHOTO Tr. HOLDER	1	